AITCHISON SEEDMATIC

40/4124 D Series

DRILLS

Concave Disc Openers

REESE ENGINEERING LTD

41 KELVIN GROVE ROAD – PO BOX 5056

PALMERSTON NORTH, NEW ZEALAND

PHONE: +64 6 357 9323

FAX: +64 6 354 3155

www.reeseagri.com

Contents

Introduction

Dear Valued Owner,

Congratulations, you have just made an excellent investment.

Your new Aitchison drill has been designed and engineered to give years of dependable service. Every consideration has been taken to incorporate the latest technology, thus ensuring optimum seeding is achieved. Aitchison Drills provide the optimum agronomic environment, ensuring proper seedling germination, leading to superior crops and thus greater revenue earning potential.

It has often been said: “when all else fails-read the operator’s manual” and to ensure you get the best from your new Aitchison drill it is very important that you thoroughly read through the entire contents of the manual. Please also pay attention to the maintenance recommendations, understand the calibration system and consider the design features and their specific functionality.

Your local dealer carries an extensive range of genuine Aitchison spare parts and consumables that also have been engineered to provide long service and life. It is important that only genuine parts are used on your drill.

Thank you for making your investment in our expertise.

Yours Sincerely,

Ross Simpson

Director
Reese Agri

WARNING

THE OPERATION AND ADJUSTMENT OF THE REESE MACHINE REQUIRES A COMPLETE KNOWLEDGE OF THE CONTENTS OF THIS HANDBOOK. TO AVOID PERSONAL INJURY PLEASE ENSURE THAT ALL PERSONNEL ARE THOROUGHLY CONVERSANT WITH ALL DETAILS BEFORE COMMENCEMENT OF OPERATION OR MAINTENANCE.

WARRANTY

COMPLETE AND RETURN WARRANTY REGISTRATION TO ENSURE VALIDATION.

IN AUSTRALIA AND NZ RETURN TO: REESE ENGINEERING LTD, PO BOX 5056, PALMERSTON NORTH, NEW ZEALAND

REESE warrants that the Machine delivered shall conform to the specifications set out in this Handbook.

REESE makes no warranty of saleability or fitness for a particular use, nor is there any other express or implied warranty.

Subject to such other conditions, warranties, and/or undertakings which may apply from time to time under any applicable law, REESE warrants with respect to each new AITCHISON Machine sold by its accredited agents, that for a period of twelve months from the dates of original retail sale, REESE will repair or replace free of charge any part found to be defective in factory materials or workmanship under normal use and operation within the United States of America, Canada, Australia and New Zealand provided that;

1. The Machine

(a) has been properly assembled and adjusted
(b) has been properly used and operated within the capacity and operating limitations specified by the manufacturer thereof, and
(c) has been properly maintained and cared for.

2. This Warranty applies to direct purchase from an authorized AITCHISON dealer. If any defect or fault shall arise such purchaser must return the defective work or Machine to an authorized AITCHISON Dealer within ten working days of such defect or fault arising.

3. In the event of the purchaser attempting to repair or replace the work or product without prior written consent of an authorized AITCHISON Distributor this guarantee shall become void. REESE may replace or repair any damaged product or work at its discretion.

4. In respect of such Machine this warranty does not apply to:

(d) misuses or carelessness in handling,
(e) Non-compliance to REESE's operating and maintenance instruction,
(f) Unauthorized repairs or alterations,
(g) Consequential damage resulting from misuse or initials faults,
(h) Parts subjected to wear or damage as a result of normal operation i.e.
    i. Sponge pads and discs
    ii. Tines and boots
    iii. Discs
    iv. Tyres
    v. Hydraulic components

5. **Any disputes in relation to this contract or product shall be governed by New Zealand law and shall be determined in New Zealand court**.

TO THE OWNER AND OPERATOR

Your Aitchison Drill was carefully designed and manufactured to give you years of dependable service. To keep it running efficiently, read and follow the instructions in this operator's manual. Any questions you may have that are not covered in this manual should be referred to your dealer:

Dealers Name: _____

Address: _____

Phone No: Business: _____Private: _____

Date of Purchase: _____

Model: _____ Serial Number: _____

The warranty card on your Seedmatic Drill is included with this manual. Please ensure that the registration card is correctly filled in.

The owner must ensure the dealer, upon delivery of the machine, has completed the **WARRANTY REGISTRATION CARD**. This must be signed by the owner and returned to the factory promptly. **Failure to carry out this function could nullify warranty claim opportunities against the factory in the future**. Warranty claims will only be accepted for registered products.

When ordering spare parts, quote the model and serial number of the drill and use the Aitchison part number given in the parts section. Reference to the right hand and left hand is taken from behind in the direction of travel.

TECHNICAL SPECIFICATIONS

Model	4024D	4024DT	4124D	4124DT
Transport Width	3.425m 11.23ft	3.425m 11.23ft	3.425m 11.23ft	3.425m 11.23ft
Sowing Width	3.000m 9.8ft	3.000m 9.8ft	3.000m 9.8ft	3.000m 9.8ft
Height	1.750m 5.7ft	1.750m 5.7ft	1.750m 5.7ft	1.750m 5.7ft
Weight Empty	1420kg 3130lb	1785kg 3935lb	1550kg 3417lb	1915kg 4221lb
Length	2.080m 6.8ft	4.375m 14.3ft	2.270m 7.4ft	4.375m 14.3ft
Seed Capacity	850lt 24.1bu	850lt 24.1bu	570lt 16.1bu	570lt 16.1bu
Fertiliser Capacity	N/A	N/A	590lt 16.7bu	590lt 16.7bu
Number of Coulters & row spacings	24 Rows @ 125mm / 5”	24 Rows @ 125mm / 5”	24 Rows @ 125mm / 5”	24 Rows @ 125mm / 5”

Optional Accessories:

Bin level indictor; A3083
Hydraulic Kit for Drawbar; A3129

SAFETY FIRST

Keep all covers in place when using the drill.
Stop the drill before making adjustments.
Lower the drill to the ground or put on props when working around the machine.
Tighten all nuts and bolts after initial use.

FOLLOW SAFETY INSTRUCTIONS

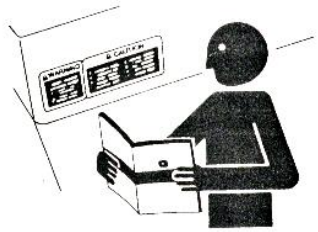

Carefully read all safety messages in this manual and on your machine safety signs. Replace missing or damaged safety signs, these can be ordered from your local Aitchison dealer.

Learn how to operate the machine and how to use controls properly. Do not let anyone operate it without instruction.

Keep your machine in proper working condition. Unauthorized modifications to the machine may impair the function and/or safety and affect machine life.

If you do not understand any part of this manual and need assistance, contact your Aitchison's dealer.

OPERATE YOUR MACHINE SAFELY

Be careful when operating machine to avoid injury.

Serious injury or death can result from contact with electric lines. Use care when moving or operating the machine near electric lines to avoid contact.

Be careful when operating on hillsides, tractor can tip sideways if it strikes a hole, ditch or other irregularity.

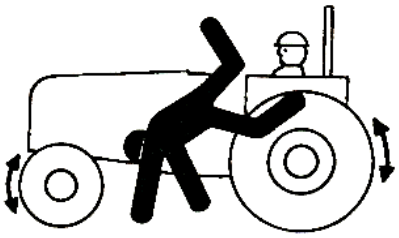

Permit only one person, the operator, on tractor platform while tractor and planter are in operation. Keep riders off. They are subject to injury such as being struck by foreign object and being thrown off the machine. They also obstruct the operators view.

WEAR PROTECTIVE GEAR

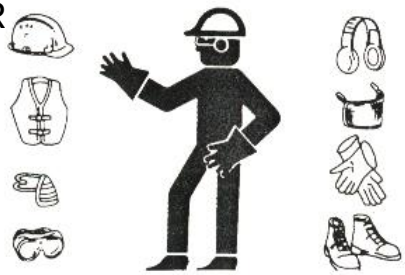

Wear close fitting clothes and safety equipment appropriate to the job.

Wear suitable hearing protective device as prolonged exposure to loud noise can cause impairment or loss of hearing.
Wear safety gloves when working with discs as they can have sharp edges.

Operating equipment safely requires the full attention of the operator. Do not wear radio headphones while operating machine.

BE SAFE WITH CHEMICALS

Direct exposure to agricultural and hazardous chemicals can cause serious injury. Potentially hazardous chemicals used with Aitchison equipment include such items as lubricants, coolants, fertilizer, paint and adhesives. If in doubt, contact your local Aitchison dealer for information about chemical safety and first aid procedures.
Keep a fire extinguisher and first aid kit handy

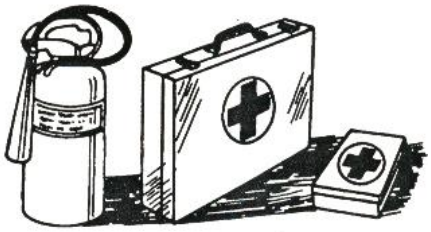

When disposing of chemicals, make sure hoppers are properly washed to get rid of any chemical residue and that any chemicals are disposed of in an approved manner. Follow instructions of chemical manufacturers for disposal methods.

USE SAFETY LIGHT AND DEVICES

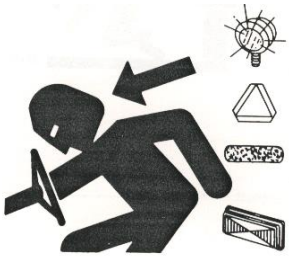

Slow moving tractors and equipment can create a hazard when driven on public roads. They are difficult to see, especially at night. This could lead to personal injury or death if a collision with a vehicle occurs.

Whenever driving on public roads, use flashing warning lights. Provide extra lighting at night on machine and tractor. An implement safety lighting kit is available from Aitchison Industries.

TRANSPORT SAFELY

Do not exceed transport speed for machine; see your local Aitchison dealer. Never transport at any speed which does not permit adequate control of steering and stopping.
Reduce speed over rough ground

For safe transport, tractor must weigh more than machine.

REDUCE SPEED WHEN TOWING LOADS

Braking to stop towed loads from transport speeds can cause the towed load to swerve and upset. Reduce speed if towed load weighs more than the tractor and is not equipped with brakes.
Use additional caution when towing loads under adverse surface conditions, when turning and on road marking lines.

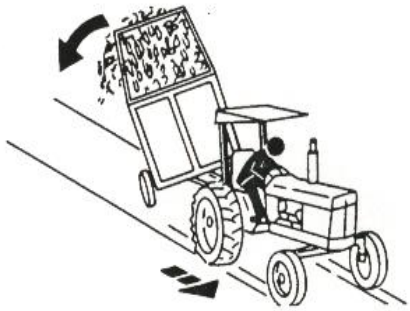

PRACTICE SAFE MAINTENANCE

Understand service procedure before doing work. Keep area clean and dry.

Never lubricate service or adjust machine while it is moving. Keep hands, feet and clothing from power driven parts. Disengage all power and operate controls to relieve pressure. Lower the equipment to the ground. Allow machine to cool.

Securely support any machine elements that must be raised for service work.

Keep all parts in good condition and properly installed. Fix damage immediately. Replace worn or broken parts. Remove any build-up of grease, oil, or debris.

Remove paint before welding or heating. Avoid potentially toxic fumes and dust when sanding, repainting or welding. Do all work outside in a well-ventilated area. Dispose of paint and solvent properly.

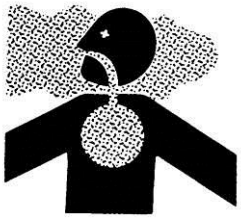

Avoid heating near pressurized fluid lines or other flammable materials. Pressurized lines can be accidentally cut when heat goes beyond the immediate flame, which could result in severe burns to yourself and bystanders.

Avoid high-pressure fluids. Escaping fluid under pressure can cause injury. Relieve pressure before disconnecting hydraulic or other lines.

DISPOSE OF WASTE PROPERLY

Improper disposing of waste can threaten the Environment and ecology. Use leak-proof Equipment when draining fluids. Do not use food or beverage containers that may mislead someone into drinking from them.

Do not pour waste onto the ground, down a drain, or into any water source. Use the manufacturers directions on the correct way to recycle or dispose of waste.

GENERAL OPERATION IN THE FIELD

When the drill is in work in the field, adjust the top link to make the frame level and the sway chains to give 75-100mm (3-4") lateral movement. The tractor hydraulics should be set to allow the drill to float over the terrain unimpeded by the movement of the tractor. Adjust the depth wheels evenly on both sides to give the required opener penetration. In extremely hard conditions it is permissible to weigh the front of the drill to aid penetration.

The drill should always be moving forward when lowered or raised from work. Avoid stopping and never reverse with drill in work. These precautions will avoid blocking outlets; however make periodic checks for blockages while drilling.

The speed of travel is governed by the conditions e.g. if the ground is rough the drill may tend to bounce which would necessitate a lower speed. In optimum conditions 8 km/h (5 mph) may be maintained.

Always lift the drill out of the ground before turning sharp corners as this will protect the openers and stop the turf from ripping.

Under no circumstances should the tractor wheels be allowed to slip excessively as this will break the turf and the following Discs will tear up the ground. If slippage is a problem, use a tractor with more traction or wait for the ground to be in better condition. Towing chains or bar harrows behind the drill is very beneficial as this will crumble the groove and help to cover the seed.

PASTURELAND FARMING WITH SEEDMATIC

Continuous reaping of grasses either by machine or animal will eventually lead to their degeneration. Desired species of grasses and legumes will weaken and their ability to survive adverse climatic conditions will be diminished. Undesirable species of grasses and weeds will eventually tend to dominate, or pasture may simply thin out with minimal plant populations. Of course conditions that cause pasture degenerations vary from location to location, and from country to country, but one can assume that every pasture can be improved no matter where its location.

MANAGEMENT CONSIDERATIONS

In describing the technique for sowing seeds into uncultivated soils, we should clarify the terminology. It is most common to refer to CONSERVATION TILLAGE (or CT) but it may be called SOD-SEEDING in Australia, or DIRECT DRILLING in UK or even NO-TILL SEEDING in North America. Wherever it is practical, successful conservation tillage requires well considered and thorough preparation, integrated with a whole farm management program.

The cropping rotation, optimum sowing dates and grazing fertilization program will depend on the seasonal vegetation or weed spectrum, paddock history, soil type, fertility and drainage, and many other factors.

Here is a checklist that should be followed for any CT program (courtesy of Monsanto NZ Ltd):

1. Check that the soil pH is around 6.0.
2. Check soil fertility levels for fertiliser requirement.
3. Ensure your spray boom has a marking system and is fully operational.
4. Establish optimum time for planting.
5. Check and control weeds present, before and during crop establishment.
6. Check and control insect and slug infestation before and during plant establishment.
7. Ensure soil conditions are suitable for drilling.
8. Inspect the crop regularly after planting.

Experience has shown that farmers new to CT often have crop failures on the first occasion, but as their skills and understanding of the technique improve, so do their crop results.

TECHNIQUES AND TIMING FOR PASTURE RENOVATION

There are two basic techniques for pasture renovation, i.e. rejuvenation and renewal. Rejuvenation is the most efficient technique and involves sowing the seeds of new and virile pasture grasses and legumes direct into existing pasture and have them gradually take over the old strain, without causing loss of production due to cultivation. This technique is known as 'stitching in'. Renewal involves a total herbage control system, i.e. spray off old pasture with a wide spectrum herbicide before drilling.

Local knowledge is invaluable when determining which techniques to use and when to use them. The best time for pasture renovation will vary by region, and is largely governed by the temperature and weather that follow. In temperate climates with mild winters the autumn is best and tropical climates the spring is the best time when the tropical grasses have not recovered from their winter dormancy. In arid climates the time is directly before or after summer rains.

The basic requirement for seed germination is a warm moist seed bed. The aim should be to sow the seed at a time when there is sufficient moisture for quick germination, and little likelihood for later drought. The Aitchison opener/coulter however will promote germination in much drier soils than any other known coulter when used correctly.

SIMPLE RULES TO FOLLOW FOR SUCCESSFUL PASTURE RENOVATION

TIME	TEMPERATE PASTURELAND		TROPICAL PASTURELAND	ARID PASTURELAND
	REJUVENATION	RENEWAL		
	Autumn or spring	Autumn	Spring	Before or after monsoonal rain
1.	Graze heavily	Graze heavily	* Mow with flail type mower	
2.		Allow 1 week to recover	Allow 3 days to recover	
3.	Seed with Seedmatic	Spray with total spectrum herbicide. Include insecticide	Spray for insects. Can use light herbicide rate to control competition	
4.	Spray for insects and watch for witholding period requirements	Seed with Seedmatic	Seed with Seedmatic	Seed with Seedmatic
5.	Graze lightly	Graze lightly	Graze lightly	Graze lightly

* An application of a total spectrum herbicide may replace mowing if the ground cover is short. Sowing must be done within 10 days.

MICRO INSECTICIDE GRANULES IN PASTURES

In New Zealand where grass grub is a problem, excellent control has been attained with the use of Gesapon, Dasanit, Dysiston, Mocap, and Lindane in control of this pasture destroyer. Normal rates applied on the pasture surface can be as high as 30 kg/ha (26 lb/acre) but when sown in the soil and hence away from neutralizing effect sunlight, rates as low as four and five kg/ha can be used. If unexposed to sunlight these chemicals can remain effective in the soil as long as three months, thus killing generations of pupae as they emerge. This factor is an important feature of the Seedmatic.

Watch for slugs. Slugs like the moist groove produced by the wing blade opener. If slugs become a problem (eating seeds or seedlings underground), a suitable pellet should be used.

DIRECT SEEDING OF FEED CROPS AND ARABLE CROPS WITH THE SEEDMATIC AND GRASSFARMER.

We are not in a position to give total formal recommended seeding rates, chemical usage and fertiliser recommendations because of circumstance that the Seedmatic will be used in will be so varied and diverse that some misunderstanding can occur.

Refer to the checklist and ALWAYS confirm with known successful CT operators as well as your local seed specialist and chemical company representatives. Remember that with this technique the environment is not as predictable as with cultivated soils, and take the precaution of using insecticide or increased fertiliser if there should be any element of doubt.

Seeding programs are wide and varied and it is best to look at rotation that starts with a legume or feed crop followed by a grain crop, followed by another feed crop and so on. Heavy pasture into grain can be disappointing, but grain after legume or brassica is outstanding.

Here are just a few possibilities:
Brassicas, Turnips, Swedes, Legumes – Can be sown spring (for winter feed) or again in autumn for later winter early spring feed. The technique is to blanket spray the entire area and ensure that seeding depths are shallow. A light bar harrow pulled over the seeding areas is beneficial. Use fertiliser and see your chemical company specialist with regard to the correct insecticide to use.
Winter Feed Oats – This can be seeded direct into pasture in early autumn. Existing Herbage control should be carried out.
Wheat and Barley – Direct seeding in early spring or autumn depending on variety. Always spray out pasture with approved herbicide (may not be necessary after brassica). Always sow with fertiliser.
Lucerne, Alfalfa – Sow in spring after spraying out entire area with Roundup or similar herbicide. It is always a good idea to do a soil test to ensure that the solid pH is satisfactory for plant establishment. Also it is necessary to ensure that the seeds are treated with inoculants to guarantee their germination and nodulation. Apply fertiliser and ensure that spraying and baiting for insects is carried out – particularly for control of slugs and snails.
Green-feed Maize – Carry out in spring and the same rules apply as with wheat, barley and oats. You may wish to seed in 30 or 45 cm (12” or 18”) rows and the technique for achieving that is shown under the section **SPECIAL PURPOSE SEEDING** shown later in this booklet.

SOWING IN CULTIVATED SOILS

As this is a Disc Coulter implement with a direct drill type opener, it is important to treat all seed beds as you would a pasture. With a conventional drill one works up the soil into a fine seedbed so that a broad boot type coulter will pass through leaving the seed behind the soil tilth. With the Seedmatic, cultivate the soil to destroy existing vegetation but before seeding, roll the seedbed thoroughly and then drill the seeds required into this rolled seedbed. Good germination results will occur.

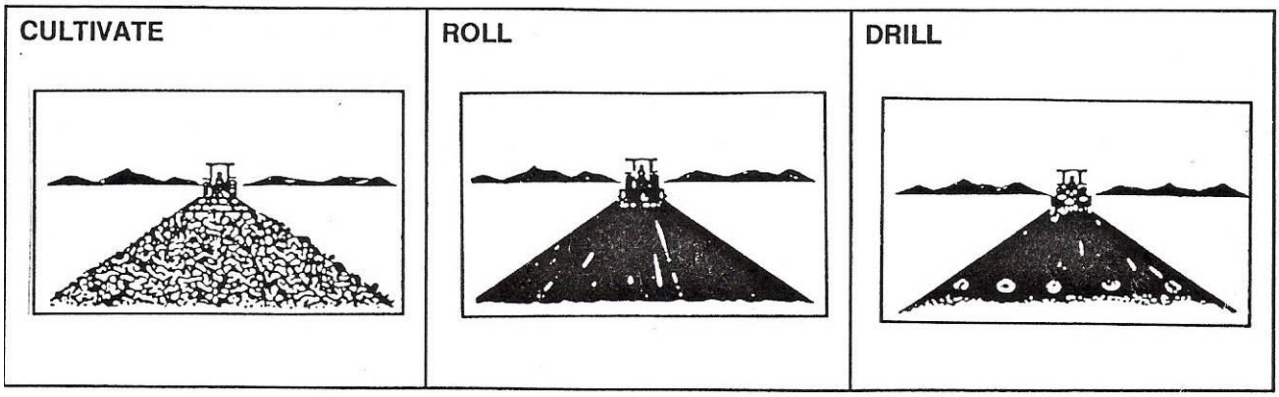

We recommend that a chain harrow be towed behind the seed drill or roll the field after seeding has been completed.

SETTING UP THE SEEDMATIC FOR USE

Connecting drill to tractor; 3 Point Linkage Models.

Connect the Seedmatic drill to the rear 3-point linkage of you tractor. Adjust the tractors top link arm so the drill frame is sitting parallel with the ground.
Adjust the tractors sway chains to give 75-100mm lateral movement.
The tractors hydraulics should be set to allow the drill to float over the terrain unimpeded by the movement of the tractor.

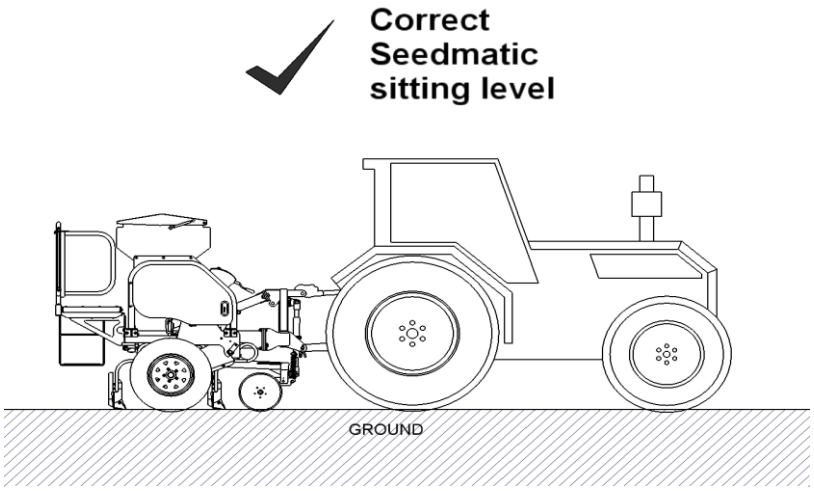

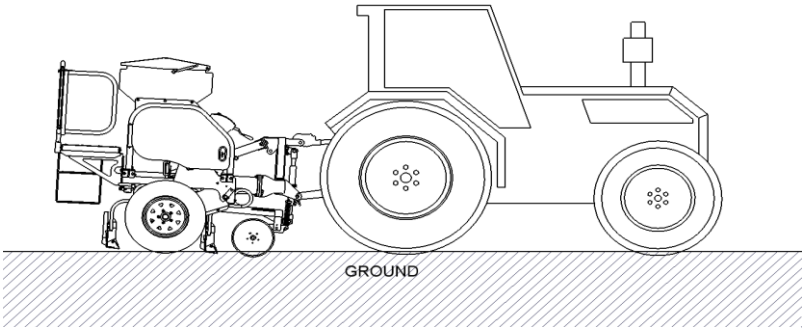

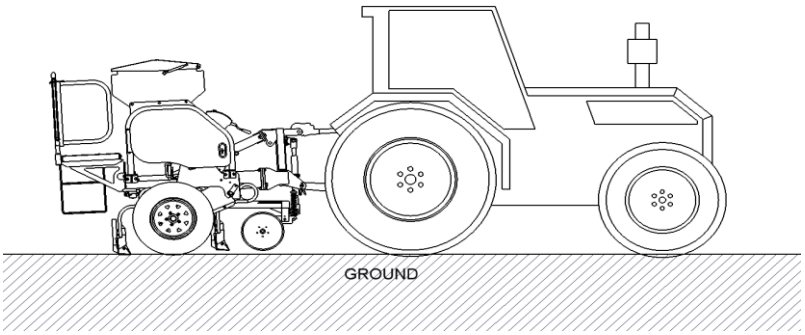

Connecting drill to tractor; Trailed Models.

Connect the Seedmatic Drawbar to the tractors Towbar. Make sure you use a safety clip on the drawbar pin.
If you are to travel on public roads ensure you fit a **SAFETY CHAIN** between the Seedmatic Drawbar and the tractor's Towbar.
Connect the Seedmatic's hydraulic hoses to one of the tractors hydraulic banks. This hydraulic system is used to rase and lower the rear transport wheels on the Seedmatic. When seeding the rear transport wheels should be fully raised clear of the ground.
Adjust the Drawbar top link to ensure that the Seedmatic drill frame is sitting parallel with the ground.

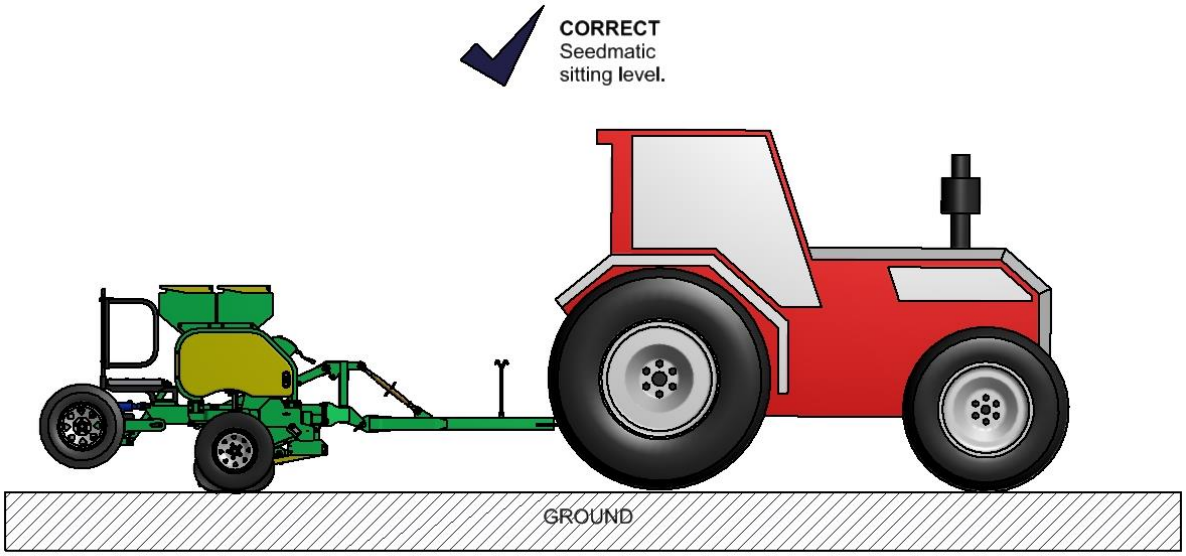

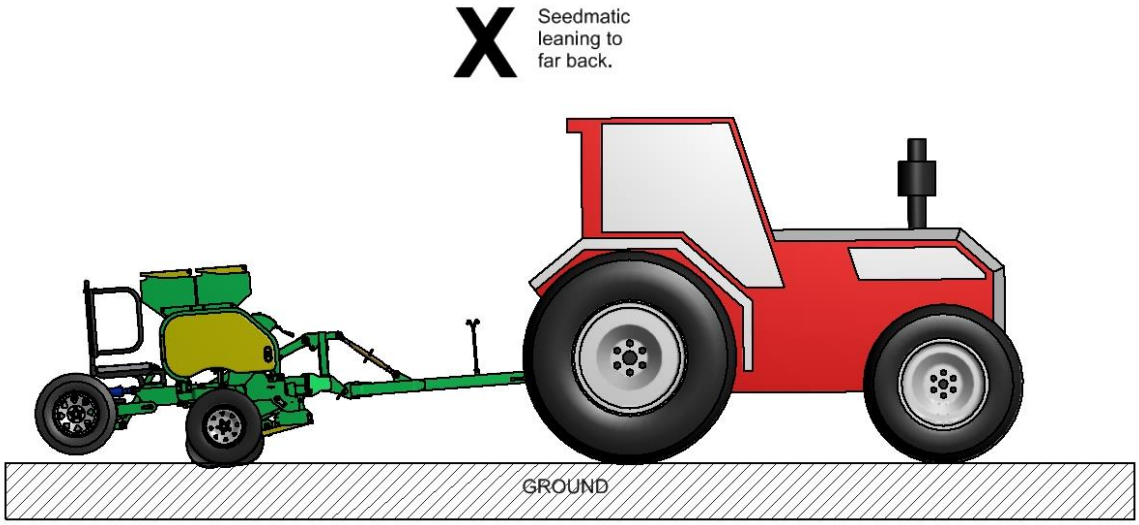
X
Seedmatic
leaning to
far back.
GROUND

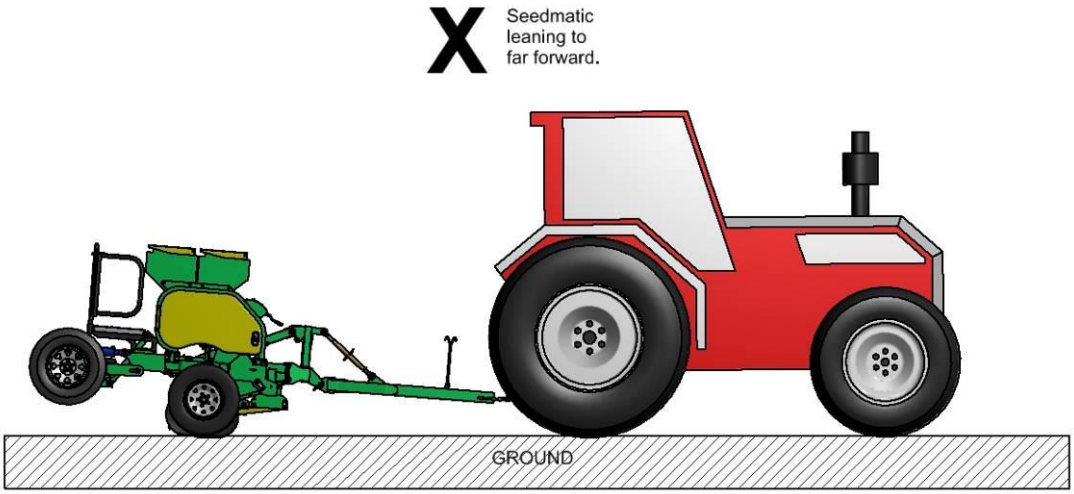
X
Seedmatic
leaning to
far forward.
GROUND

Set the depth wheels.

With the Seedmatic sitting on hard flat ground, the depth wheels should be 25-75mm clear of the ground, depending on your desired seeding depth. There is an adjustment handle at the top of each depth leg, use this to adjust the legs.
There is a depth gauge at the top of each depth leg, check that both depth legs are set at the same height

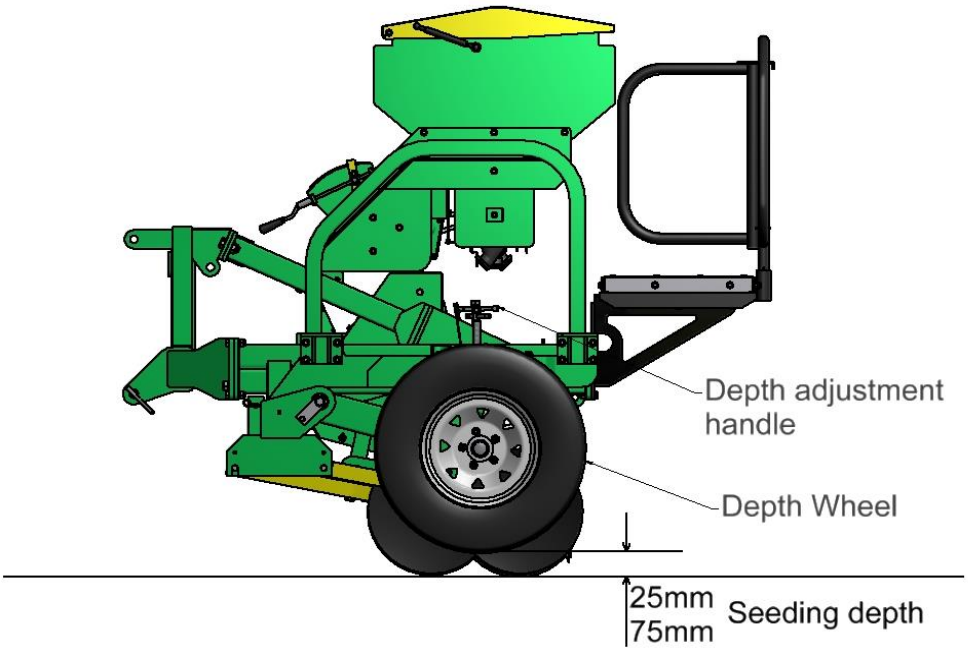

When the drill is in work, the best way to check your seeding depth is to have a scratch around in the seed slots behind the drill and check where the seeds are placed in the soil. Make the appropriate adjustments as needed.

At times we recommend that a chain harrow or light roller is towed behind the Seedmatic to help cover the seed slots. This will help prevent bird strike and can aid in seed germination.

CALIBRATING THE DRILL TO CHECK THE SOWING RATE

NOTE: When new, the Seed Pads may have a white powder (chalk dust) on them. This is to prevent them from sticking together during manufacturing. This chalk dust can impede your seeding rate until it has been removed or until it dissipates. This can be done by hand, or over time by using the seed drill.
By Hand: This can be achieved by sliding the Seed Pad away from the Housing and dusted off the powder.
Dissipates: **Simply using the Seed Drill.** (The seeding rate will slowly increase as the chalk dust dissipates. (Usually within the first hour of use.) RE-CALIBRATE.

(1) Prime: Place seed in the hopper over any 5 adjoining outlets. Rotate the Crank Handle until a steady flow of seed can be witnessed falling from the seed outlets. Set the Gearbox pointer in the appropriate position for you desired seed sowing rate. (See Seed Chart under hopper lid.)	**(2) Seed Catchment:** Place the Calibration Tray under the 5 appropriate Seed metering Units to catch the metered seed. Another method is to pull the black seed dropper hose off the 5 appropriate Coulter Tubes and place them in a bag or container.
(3) Seed Metering: 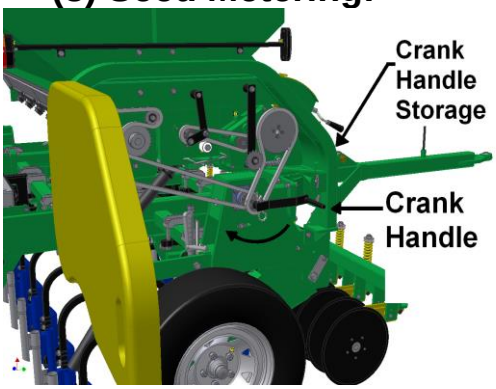 Rotate Crank Handle Clockwise **29** times.	**(4) Weigh Seed:** Catch and weigh the total amount metered through the 5 metering units. (in grams). NOTE: Remember "TARE" scales before weighing; for the weight of the bag or container.
(5) Conversion: Divide the weight measured by **3** to establish kilograms per hectare. ie: 45 grams / 3 = 15kg/ha	**(6) Check:** 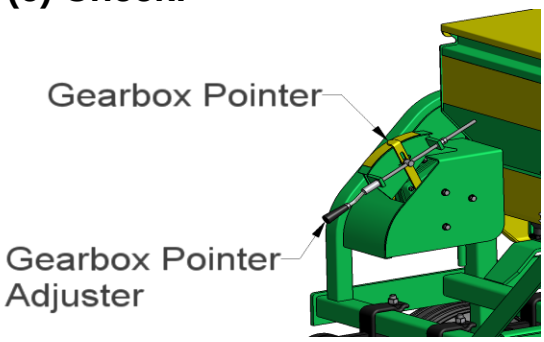 If above or below the desired rate, make the necessary adjustment via the Gearbox Pointer Adjuster. **RECALIBRATE**

Follow the above steps to calibrate the Fertiliser Hopper.

LAYMANS GUIDE TO SEEDING VARIANCE

The Aitchison Sponge Seed Delivery System is a highly accurate, consistent and gentle method for delivery of seeds. We are pleased you chose to make use of our technology. To get started, we have created the attached seed charts. They are guides that will in many cases allow you to start with reasonable accuracy.

Along with these charts you will also need to know how to compensate for variations in seeds. We are fortunate to have many companies that are constantly providing new varieties of seed; however, this also makes any seed chart a GUIDE ONLY. Use the rules listed below when suitable, and when you need more accuracy consider the following:

The seed count may be different; the coatings on the seed may be different; the humidity can be different; the seed size due to cultivars may be different; the moisture content of the seeds may be different; the seed may be husked or still have it's beard; and other differences which could affect the seeding rate.

Example

Temperate charts were calibrated for Ryegrass. Line 1 on Range 1 was calibrated at an ambient temperature of 64ºF (18ºC). Moisture content of the seed was 14%. The 1000 seed count was 0.07 ounce (2 grams) and the seeds were approx ¼" long (6.6mm) by 1/16" wide (1.5mm). There were no coatings or dressings and was cleaned of gin trash.

Note also that all seeds used on original chart were uncoated.

As it is unlikely your sample will directly match the above we suggest calibration at all times. Below are some general guidelines on what influences will affect you seeding.

SEED SIZE: Small seeds flow faster
SEED COATING: Fungicides that are dull and sticky will slow seeding rates.
TEMPERATURE: Cold will slow seeding rates, heat will increase seeing rates.
HUMIDITY: High humidity slows sowing rates, dry increase sowing rates.
SEED MIXTURE: Sowing small round seeds with flat long seeds, i.e. ryegrass and clover, the rate of the small seeds could significantly increase.
WHEEL DIAMETER: On cultivated soil slippage will reduce sowing rate.
RECORD PREVIOUS RESULTS: Keep a note book and record for future reference, mixtures, conditions and setting chosen.

Think in four quarters not the whole paddock. When the hopper runs out (1/4 paddock) check your rate back from the area covered.

REMEMBER: ALWAYS CALIBRATE BEFORE SEEDING!!!

TEMPERATE SEEDS

***NOTE**: This chart is a **GUIDE ONLY** and different seed lines within a species can have markerly different results. Therefore calibration is recommended as the only truly accurate way of obtaining the desired sowing rate for the seed you are using*

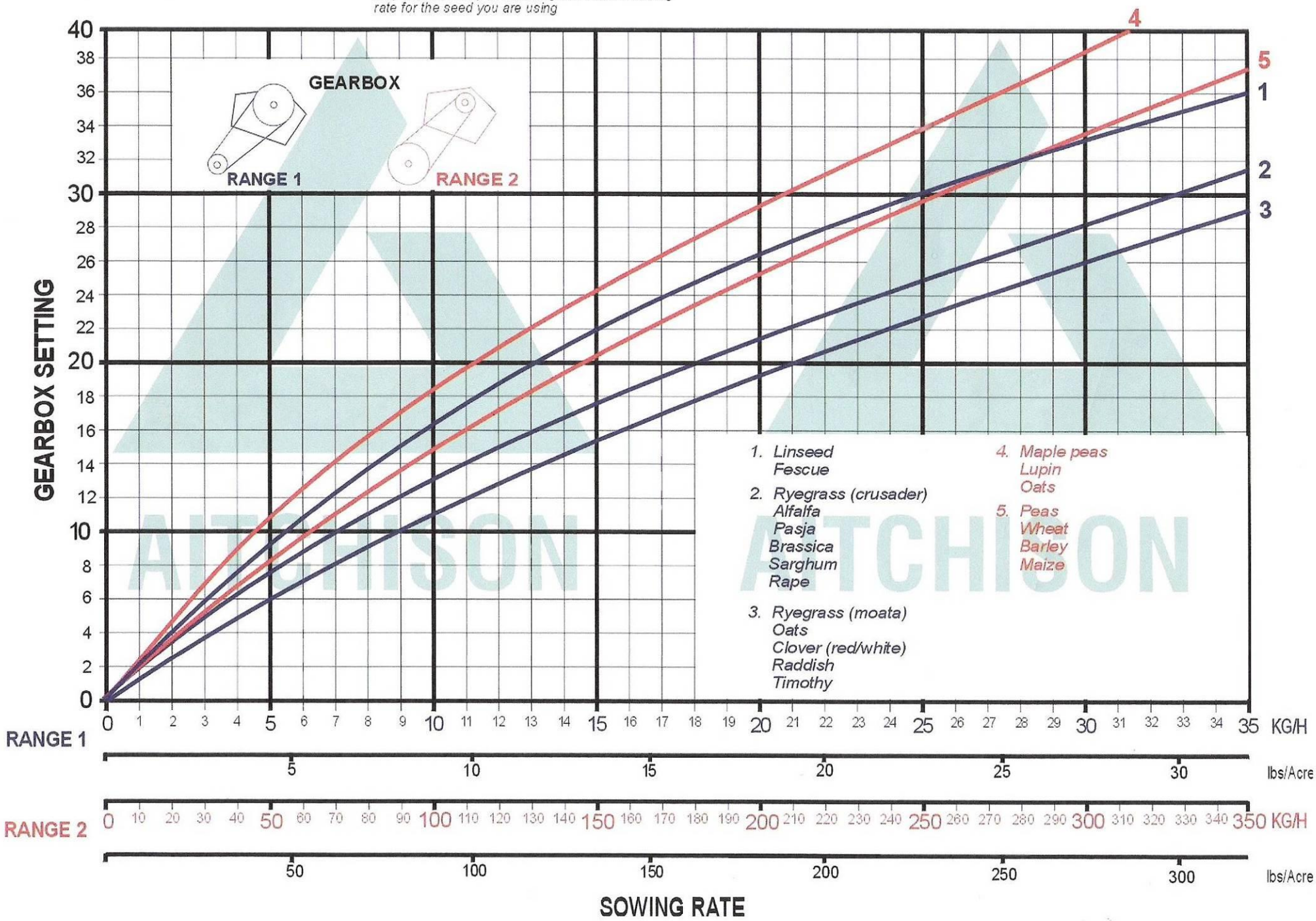

DIFFICULT SEEDS TO SOW

There are a number of seeds that are difficult to sow due to their physical shape and weight.
These include:

Prairie Grass
Buffel Grass
Callida Rhodes Grass
Unclipped oats

If seeds adhere to the sponge pad, fit the oat wiper (Part # A2366). If there are problems with large seeds failing to pick up with the sponge it will be necessary to fit the bean spacers (Part # A2365-01) which space out the pads leaving a greater surface to pick up seed.

OAT WIPER AND BEAN SPACER

Bean Spacer (Optional)

When sowing large smooth seeds such as beans markedly improved seeding performance is achieved by fitting spacers between the sponge and the seeder casting. This in effect moves the sponge away from the seeder casting and allows for better entry of the seeds into the sponge. A better 'pick up' is attained and seeding consistency is improved.

Also to decrease the advent of intermittency and improve seed spacing it is advisable to use the seeder agitator set on maximum spring pressure.

To fit the spacers follow these instructions:

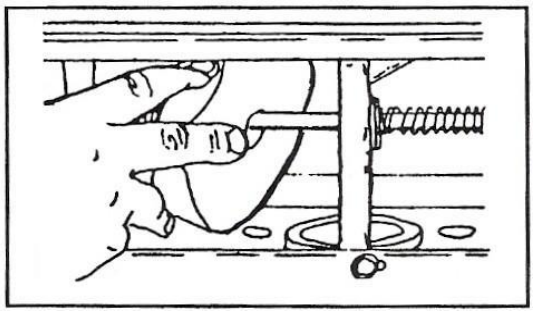

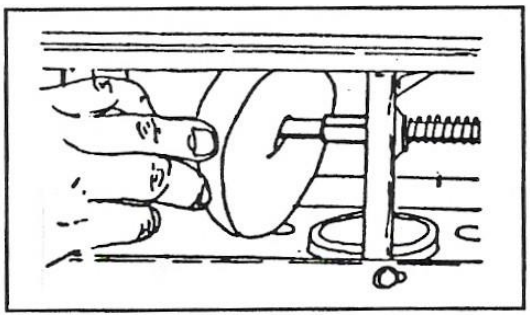

1. Pull the sponge away from the seeder casting.
2. Fit the Bean Spacer between the sponge pad and the seeder unit.
3. Allow the sponge pad to return to the seeding position with approx 3mm (1/32") between the sponge pad and seeder unit.

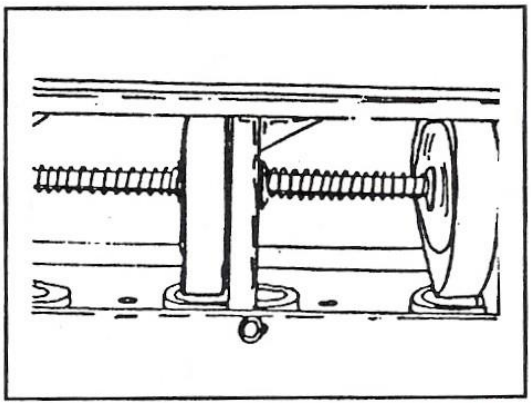

WARNING: When the bean spacers are fitted always go back and recalibrate the drill.

If small seeds need to be sown (i.e. grass seed, brassicas) or small grains (i.e. wheat) always remove the spacers and store in a safe place.

OAT WIPER (Optional)

The oat wiper is an optional extra that is designed to wipe clean the sponge pad if heavily awned seeds are not being sown. These will tend to collect on the pad and as the build-up increases inaccuracies in the seeding rates will occur.

To fit the wiper, remove the front panel from seed box. Pull the sponge pad away from the seeder assembly and place the wiper on the centre shaft BETWEEN the pad and the casting. The wiper works in such a way that it presents a flexible edge on the oats and in effect 'wipes' the seeds that may be sticking to the pads on each rotation.

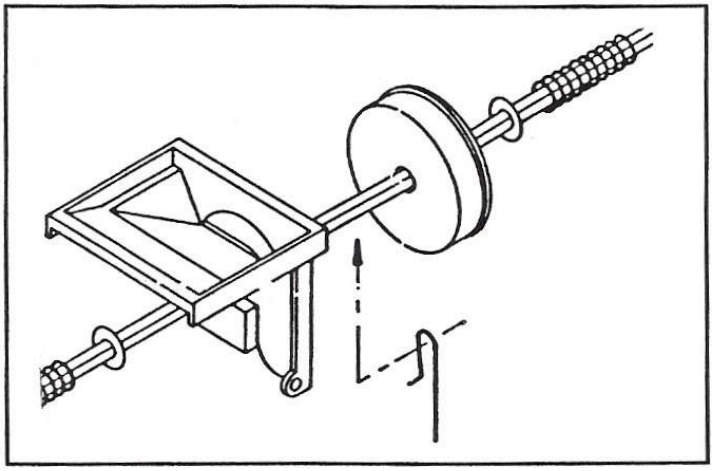

Fit the Oat Wiper between the sponge pad and the seeder unit.

RODENT DANGER

The sponge seed mechanism is unique – it has great capacity to sow seed consistently and accurately. However, if seeds are left in the hopper over the winter months rats and mice will find an entry point into the hopper by chewing through the sponge pad to reach the seeds. The simple solution therefore is to **remove the seeds.**

BLANKOFF TRAY

Your SEEDMATIC drill is equipped with a "Blankoff Tray". This blankoff tray is located under the seed hopper, between the seeder units and the seed dropper hose. The purpose of this blankoff tray is to help prevent rodent damage to the sponge pads. Located at the drive end (RH side of drill) is the sprung handle, this handle slides and locks the blankoff tray.
The blankoff tray should be open when planting seeds, then slid closed when the drill is not in use to prevent rodents from climbing up the seed dropper hoses.

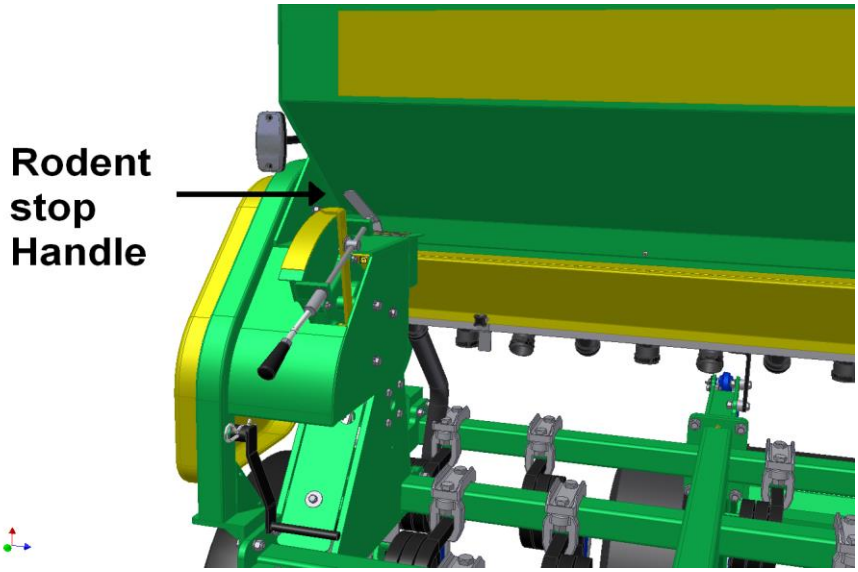

Move Handle towards the centre of drill to close off.

To give added protection, sponge pads can be treated with any strongly odoured insecticide powder – DIASINIT, LINDANE, MALATHION, and THIMET.
Note: Rodent repellent can also be ordered from Aitchison's via your local dealer (Part # 9341).

REMOVAL OF SEED FROM HOPPER

There is probably no easier drill to clean than this Aitchison Drill. Remove the front/rear panel by way of wing nuts and manually move the sponge pads away from the seeder casting. Any remaining seeds within the hopper will simply fall out. A small brush can be used to sweep any remaining seeds from the hopper.

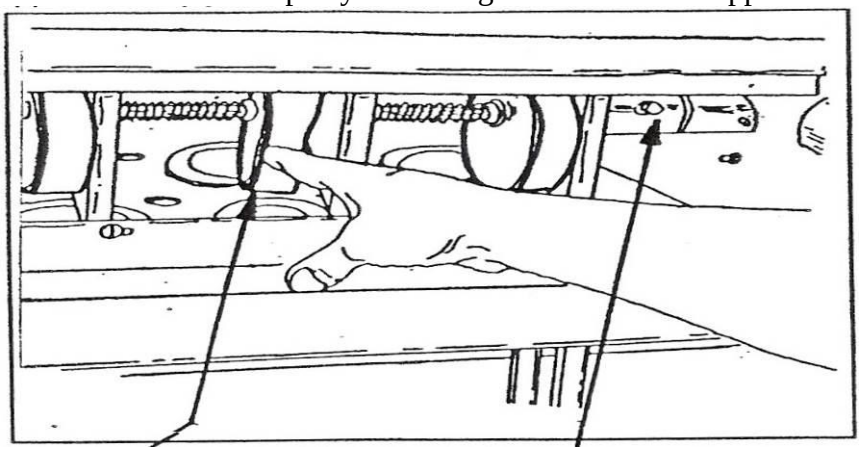

Push pads away to clean out seeds. To remove pads, loosen this setscrew and move shaft to the left.

SPECIAL PURPOSE SEEDING

If the quantity of seed is too small to accurately weigh, then collect the seed from 10 outlets and halve the result before applying the general formulae.

Using Blank Off Plates

If the blank off plates are used – this drill is calculated for rates of 125mm spacing. Blank off plates can be used if wider rows are required. These are fitted by removing the "R" clip agitator pin and fitting a plate (see illustration). These are simple to make using a square of stiff plastic or plywood.

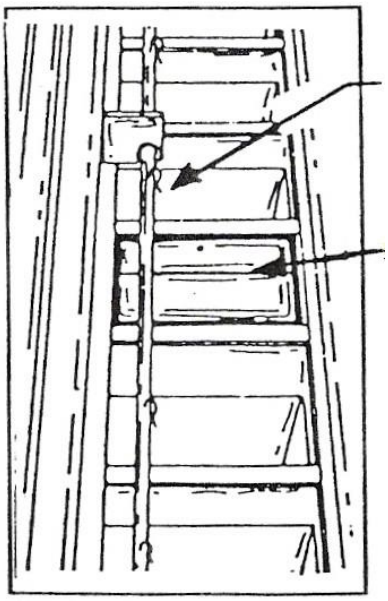

Blank off plates are inserted on each alternative seeder outlet.

For calculating your seeding rates:

- If every **second row** is blanked off (250mm (10") spacing) catch seed from five outlets and divide by 6 (not 3).
- If every **second and third row** are blanked off (375mm (15") spacing) catch seed from five outlets and divide by 9 (not 3)

CHANGING THE GEARBOX RATIO: Range 1 – Range 2

To change range: use a 5mm Hex Key to remove the 4 Cap Screws in each sprocket; replace them end for end.

Range 1; Ratio for low seeding rates and small seeds.

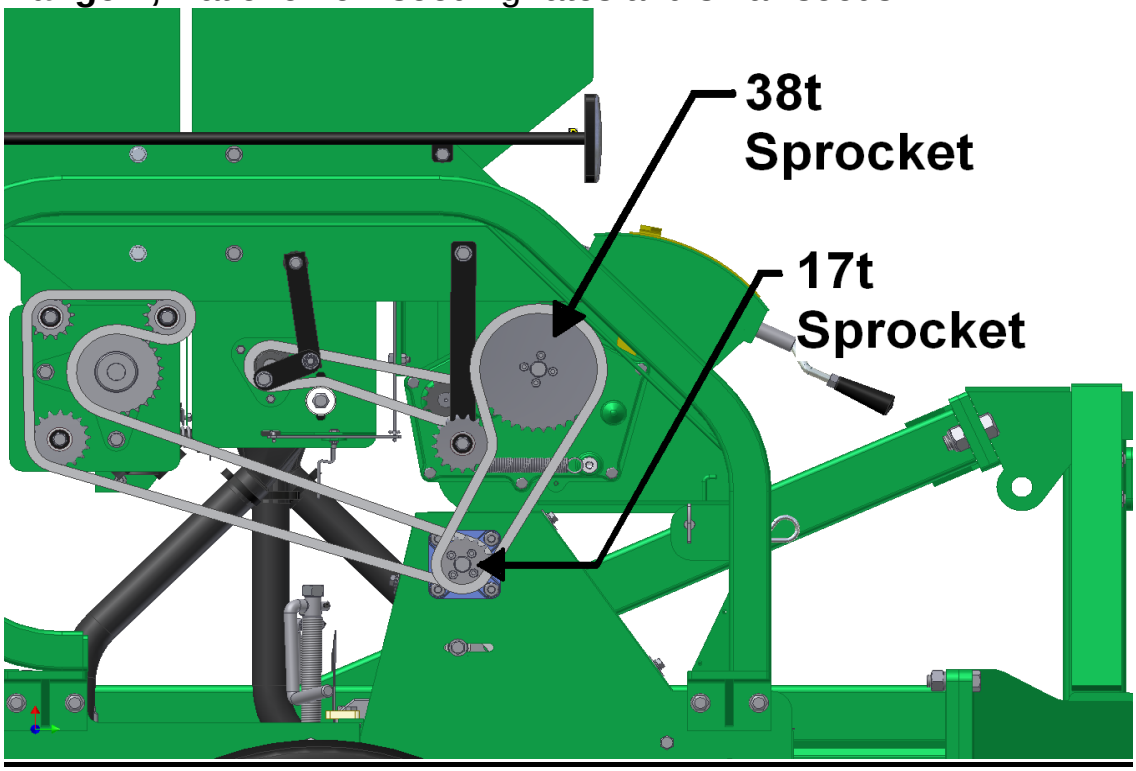

Range 2; Ratio for high seeding rates and big seeds.

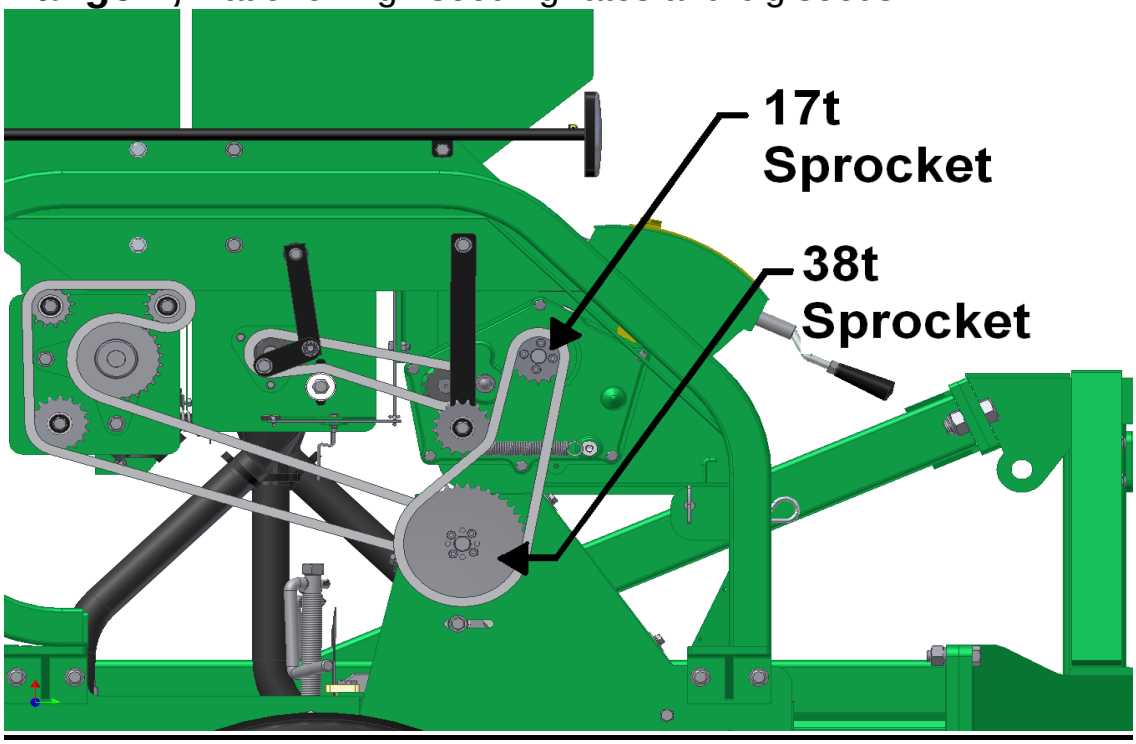

THE FERTILISER SYSTEM

Different types of fertiliser may vary slightly from the general rate of curve shown. The fertiliser rate is verified by using the same calibration procedure as used to calibrate the seed. (Page 20)
To change the fertiliser application rate, move the slide in for less or out for more.

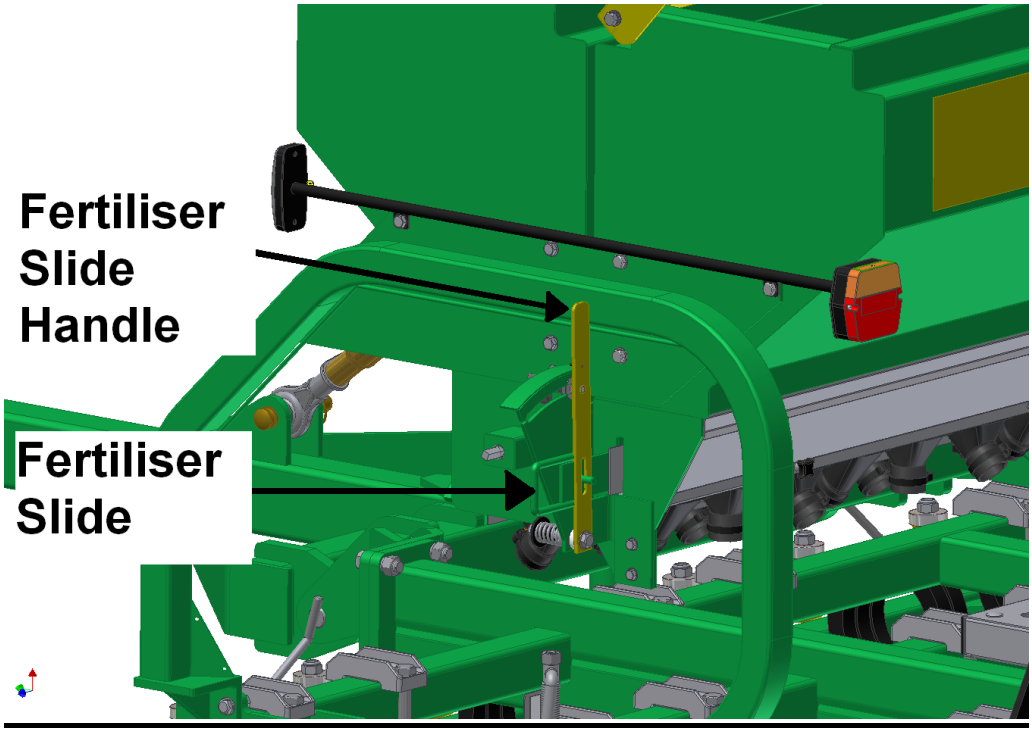

FERTILISER APPLICATION CHART

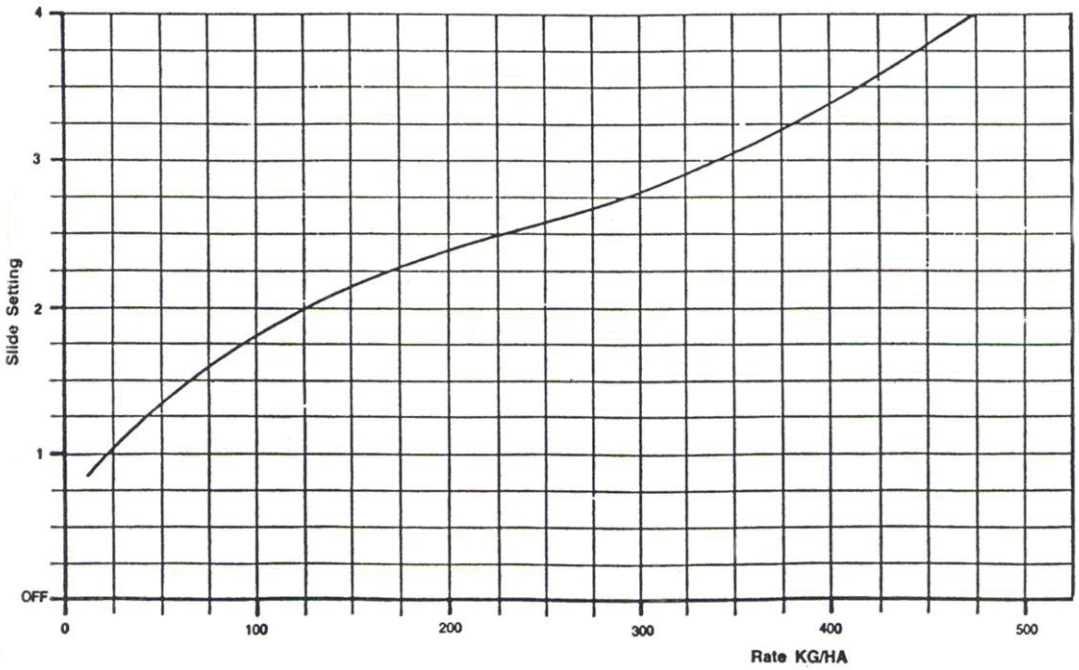

Note: This chart is a guide only. Calibration is always recommended

MAINTENANCE AND CLEANING THE FERTILISER HOPPER

The fertiliser hopper should be thoroughly cleaned after use and potential rust areas brushed down with diesel. The fertiliser slide may be easily removed without tools as shown below.
Remove the slide at the end of your planting season to ensure it can not corrode in place.
To empty or clean the fertiliser hopper remove the Auger Baffle and the rear Inspection Panels and brush out any remaining fertiliser.

FERTILISER SLIDE REMOVAL

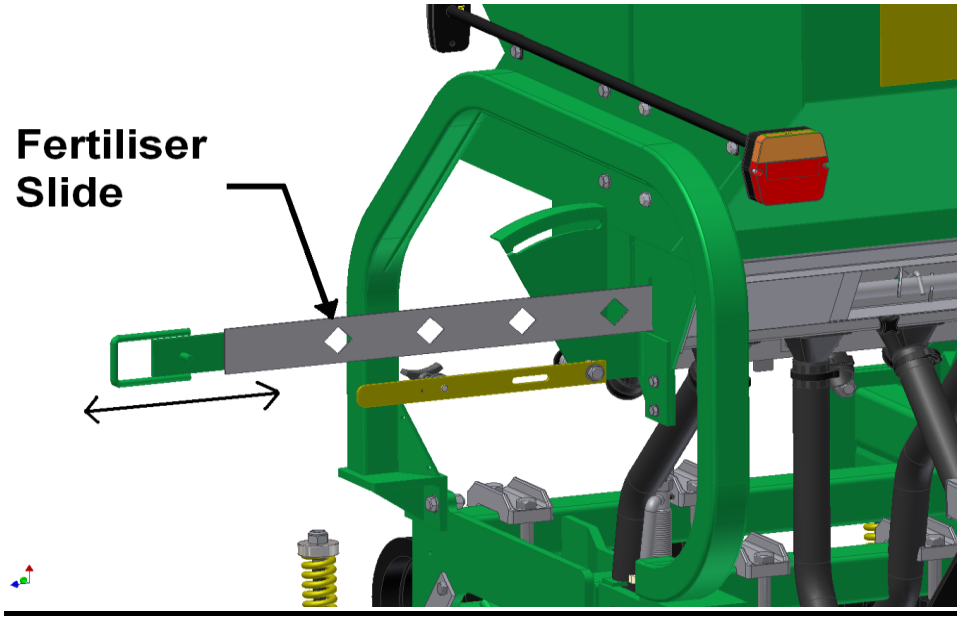

AUGER BAFFLE REMOVED

Looking down inside the fertiliser hopper.

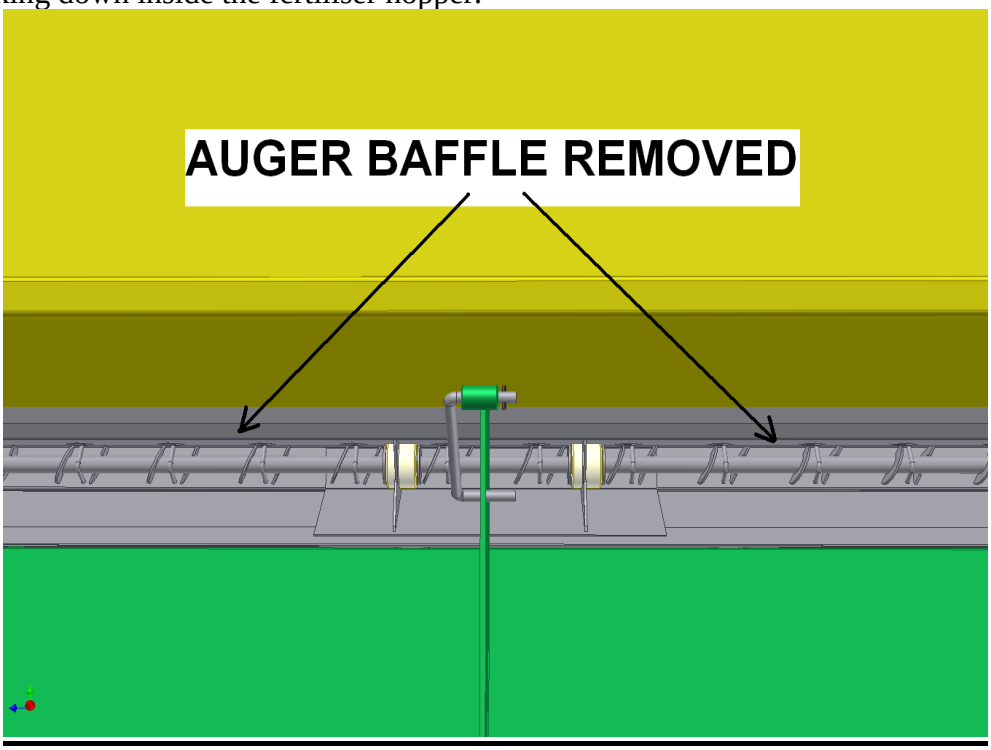

REAR INSPECTION PANELS REMOVED

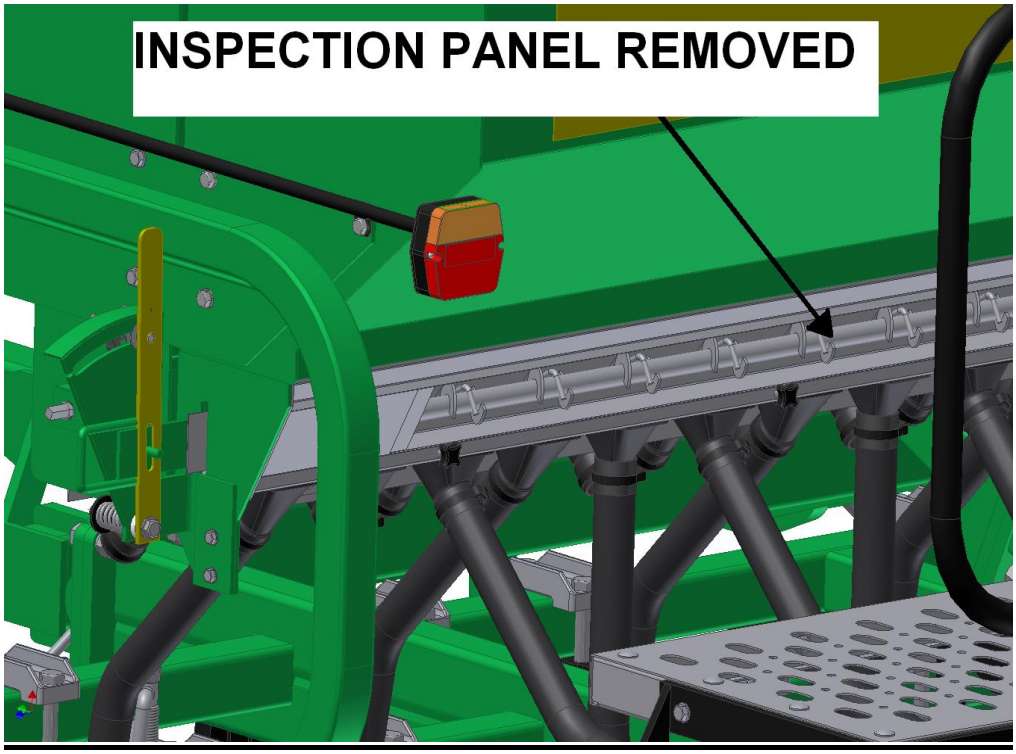

GENERAL MAINTENANCE

LUBRICATION

The gearbox should be kept filled up to the sight glass though top-ups should seldom be necessary. The oils recommended are: BP Vanellus DD50 (GL1 90.), TOTAL Carter (EP 220) or equivalent.
NOTE: Do not us a hypoid type of oil, as damage will occur.

Machines Grease Points:

- Drive Leg assembly.
- Depth Leg assembly
- Seed Shaft drive.
- Fertiliser Shaft drive.
- Rear Transport assembly.

Greasing location points are labelled on the drill with the “Grease” sticker (shown above). Chains should be kept lubricated and should be removed at least once each season and thoroughly cleaned and oiled.

CARE OF THE SPONGE PADS

The sponge pads are easily accessible for maintenance and cleaning by removing the inspection panel at the bottom of the seed hopper. The seed hopper should be cleaned thoroughly after use as vermin show little respect for a sponge pad if there is seed behind it.

To empty the hopper of seed, push the pads away from the seeder units to let the seed fall through. Do not leave seed lodged between the pad and seeder unit, as this will distort the pad giving erratic sowing. The sponge pads are replaced as shown below.

REPLACEMENT OF SPONGE PADS

Removing:

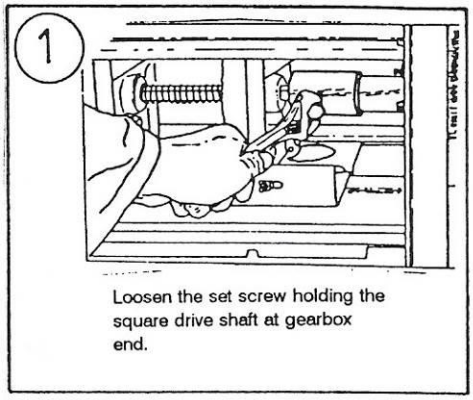

Loosen the set screw holding the square drive shaft at gearbox end.

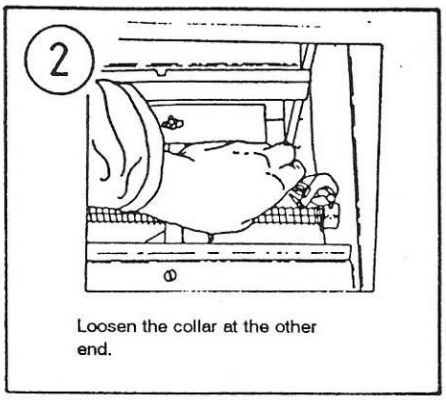

Loosen the collar at the other end.

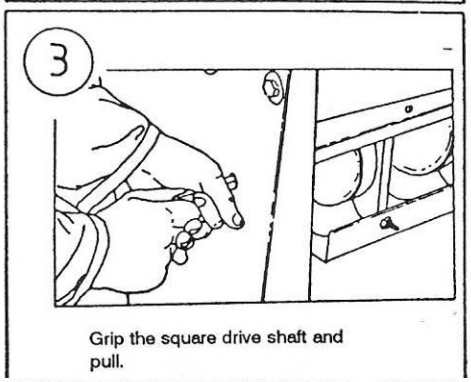

Grip the square drive shaft and pull.

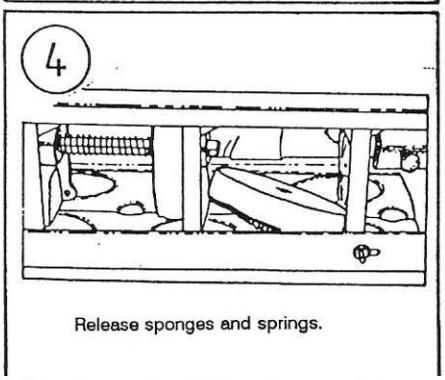

Release sponges and springs.

Inserting:

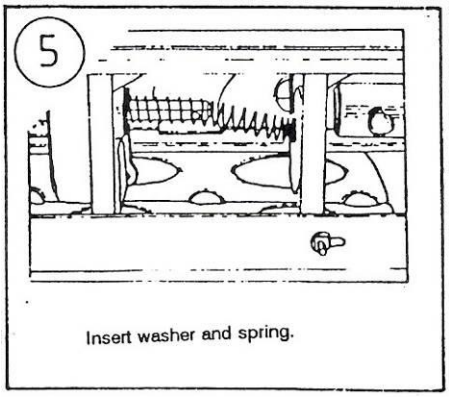

Insert washer and spring.

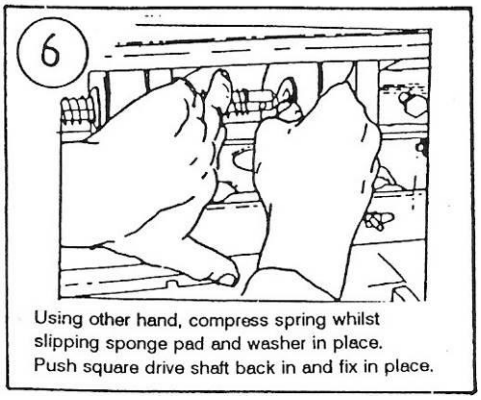

Using other hand, compress spring whilst slipping sponge pad and washer in place. Push square drive shaft back in and fix in place.

SEASONAL STORAGE

The drill should be thoroughly cleaned and lubricated and stored out of the weather. Look for any unusual wear and remedy the cause. If this requires parts it is best to order them well in advance of the next sowing season. Check all nuts and bolts for tightness. Adjust the depth wheels so the weight of the drill is on the tines and not on the tyres.

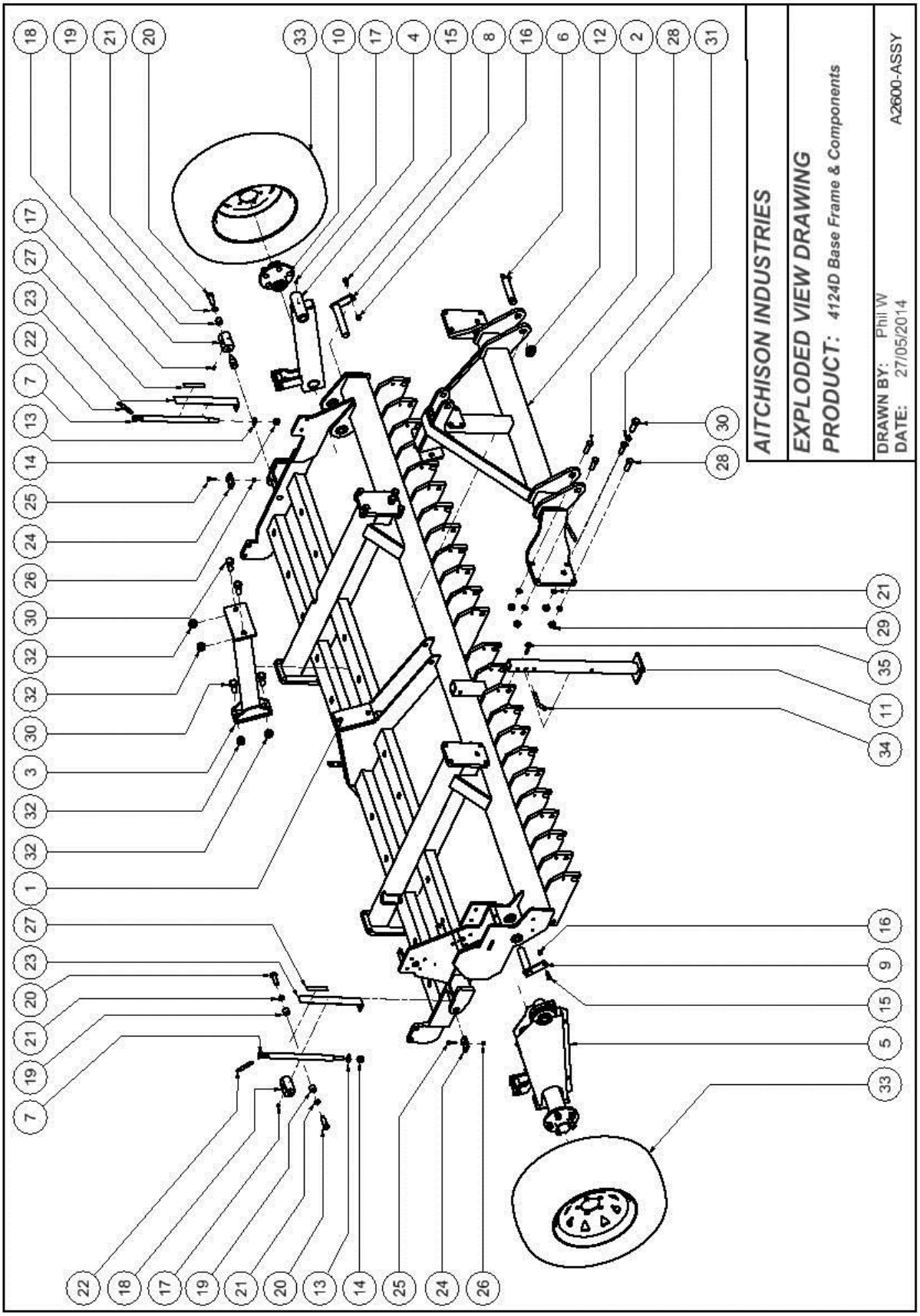
AITCHISON INDUSTRIES
EXPLODED VIEW DRAWING
PRODUCT: 4124D Base Frame & Components
DRAWN BY: Phil W
DATE: 27/05/2014
A2600-ASSY

Parts List				Parts List			
ITEM	QTY	DESCRIPTION	PART NUMBER	ITEM	QTY	DESCRIPTION	PART NUMBER
1	1	24Run "D" Main Frame Assembly	A2601	19	4	4000 Depth Leg Trunnion Keeper	A2500-01
2	1	4000 Head Stock Assembly	A2502	20	4	M16 x 50 Bolt	8616H
3	1	Headstock Stay Assembly	A2503	21	12	16mm Spring Washer	9061
4	1	Depth Leg Assembly	A2504	22	2	4000 Depth Control Handle	A2600-01
5	1	Drive Leg Setup	A2580-ASSY	23	2	Depth Leg Depth Gauge	A2500-06
6	2	AIL Cat 2 Hitch Pin	A2327	24	2	Depth Gauge Retainer	A2500-07
7	2	Depth Control Rod Assembly	A2506	25	2	M8 x 30 Bolt	8301H
8	1	4000 Depth Leg Pivot Pin	A2507	26	2	M8 Nyloc Nut	9105
9	1	4000 Drive Leg Pivot Pin	A2508	27	2	Decal - GF Depth Control	D1525
10	1	Trojan 5 Stud Hub	TR 082030	28	8	M16 x 55 Bolt	8603H
11	1	4000 Series Stand Assembly	A2602	29	8	M16 Nut	9161
12	2	11mm Lynch Pin	9288	30	6	M20 x 50 Bolt	8711H
13	2	16mm ZP Washer	9063	31	2	20mm Spring Washer	9076
14	2	M16 Nyloc Nut	16A	32	4	M20 Nyloc Nut	9172
15	2	M10 x 30 Bolt	8415H	33	2	215/75R 14C Wheel Assembly	A2500-10
16	2	M10 Nyloc Nut	9142	34	1	Stand - Pin	A23101-03
17	3	M6 Grease Nipple Straight	9323	35	1	3mm R Clip	9280
18	2	Threaded Top Trunion	A2309-01				

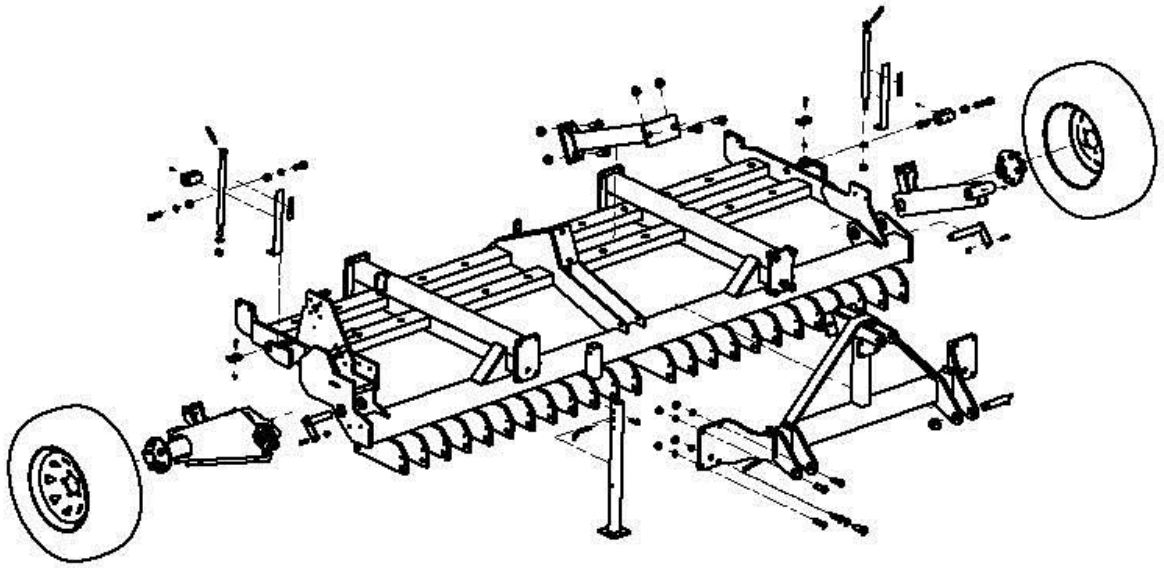

AITCHISON INDUSTRIES

EXPLODED VIEW DRAWING

PRODUCT: *4124D Base frame & Components Part No*

DRAWN BY: Phil W
DATE: 27/05/2014

A2600-ASSY

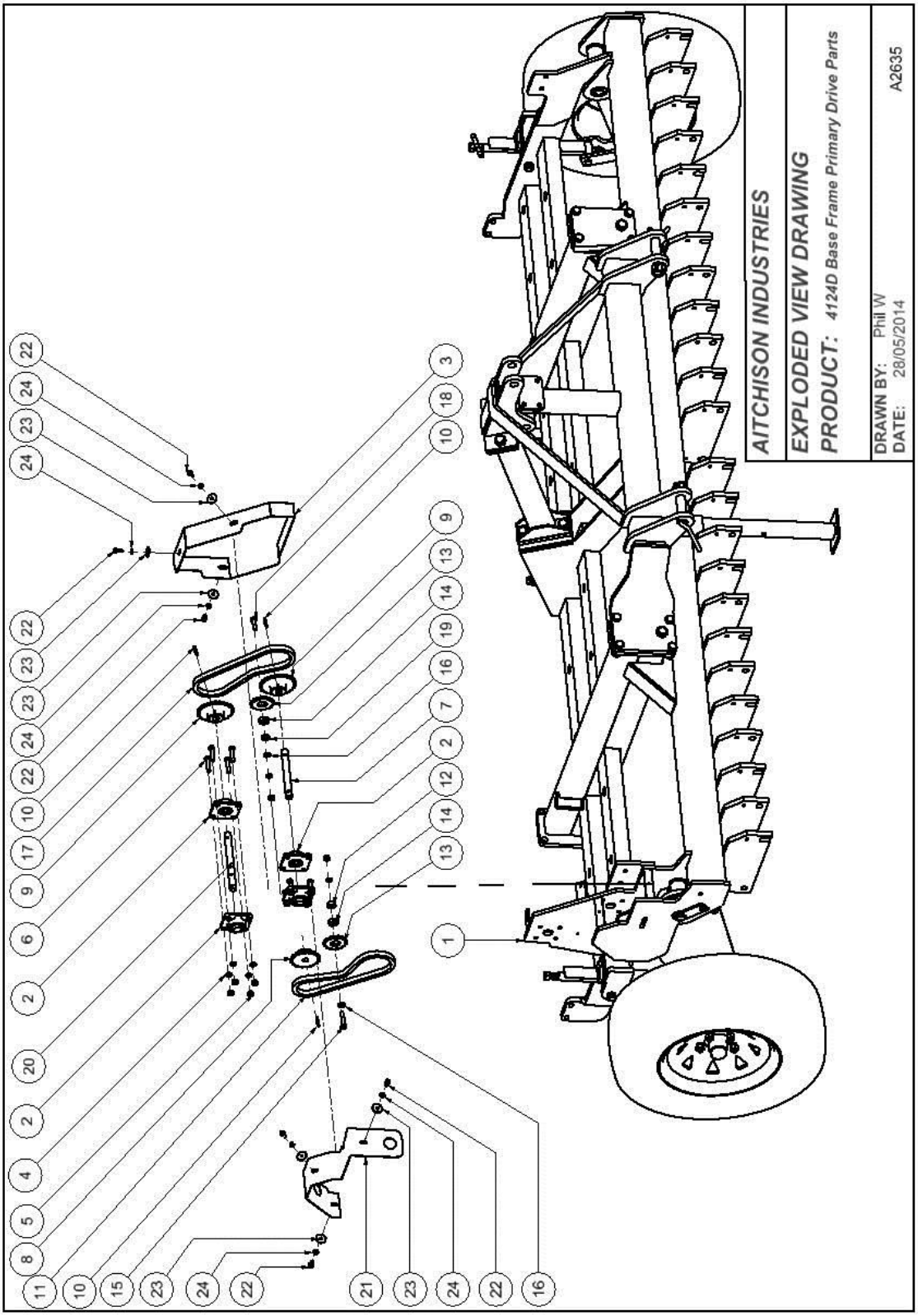
AITCHISON INDUSTRIES
EXPLODED VIEW DRAWING
PRODUCT: 4124D Base Frame Primary Drive Parts
DRAWN BY: Phil W
DATE: 28/05/2014
A2635

Parts List				Parts List			
ITEM	QTY	DESCRIPTION	PART NUMBER	ITEM	QTY	DESCRIPTION	PART NUMBER
1	1	4124D Base Frame & Components	A2600-ASSY	14	2	6200 Bearing	9219
2	4	F204 Bearing & Housing	9221 / 92205	15	1	M10 x 50 Bolt	8403H
3	1	1st LS to 2nd LS Chain Cover Assembly	A2636	16	2	10mm HD Flat Washer	9040
4	10	10mm Spring Washer	9041	17	1	1st LS to 2nd LS Chain 1/2" @ 870mm	A2635-03
5	10	M10 Nut	9141	18	1	M10 x 35 Bolt	8402H
6	8	M10 x 45 Bolt	8404H	19	1	1st LS to 2nd LS Tensioner Spacer	A2635-04
7	1	1st Layshaft	A2635-01	20	1	2nd Layshaft (Seed & Fert)	A2635-05
8	1	22T Sprocket 1/2" Pitch 20mm Bore	A2500-09	21	1	DL to 1st Layshaft Cover	A2635-06
9	2	27T Sprocket Half Inch Pitch	A2322-01	22	6	M8 x 20 Bolt	8311H
10	3	6 x 50 Roll Pin	9262	23	6	8mm Fender Washer	9032
11	1	DL to 1st Layshaft Chain 1/2" @ 845mm	A2635-02	24	6	8mm Spring Washer	9030
12	1	DL to LS Chain Tensioner Spacer	A2500-04	25	2	1/2" Chain Joiner	ZCH J
13	2	17T Plate Sprocket Tensioner	A2350-01	26	1	1/2" Chain 1/2 Link	ZCH 1/2L

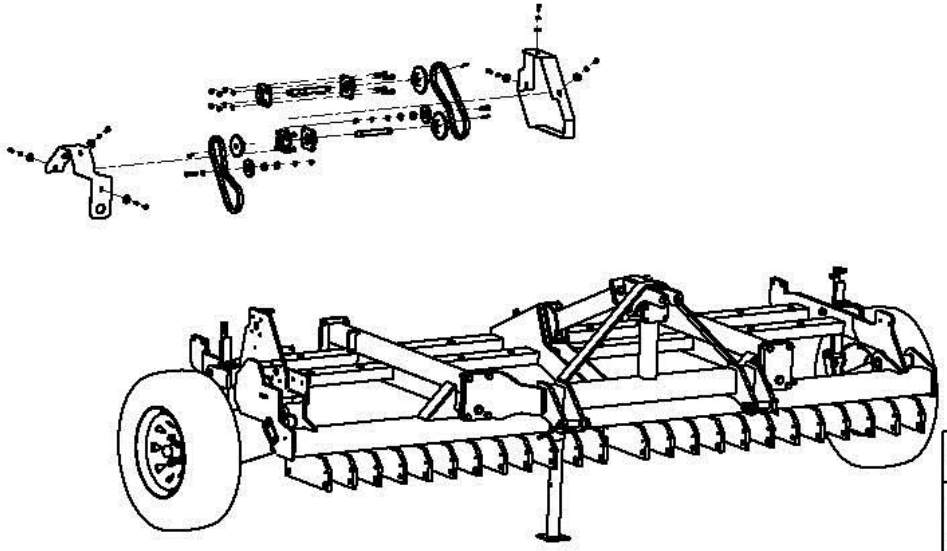

AITCHISON INDUSTRIES

EXPLODED VIEW DRAWING

PRODUCT: *4124D Base Frame Primary Drive Numbers*

DRAWN BY: Phil W
DATE: 28/05/2014

A2635

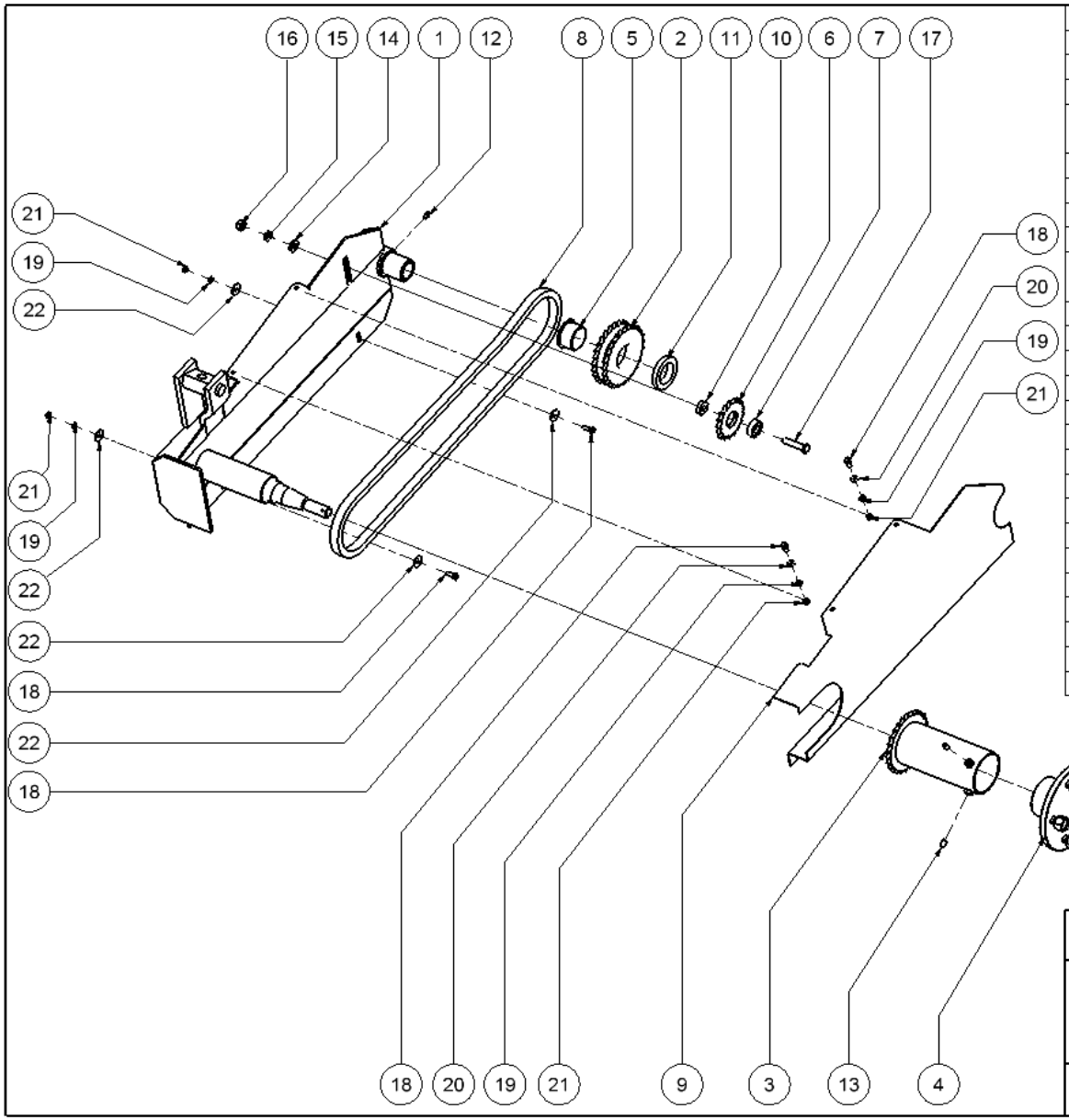

Parts List

ITEM	QTY	DESCRIPTION	PART NUMBER
1	1	Drive Leg Assembly	A2505
2	1	27T Idler Sprocket	A2580-07
3	1	Drive Hub Spacer & Sprocket (4000 Series)	A2581
4	1	Trojan Drive Hub (4000 Series)	A2580-01
5	1	FMB 4026DU	A2580-08
6	1	17T Plate Sprocket Tensioner	A2350-01
7	1	6200 Bearing	9219
8	1	Drive Leg Chain 1/2" @ 1450mm	A2580-06
9	1	Drive Leg Cover Face Plate	A2580-02
10	1	Drive Leg Tensioner Spacer	A2580-03
11	1	Drive Leg Sprocket Keeper	A2580-04
12	1	M6 Grease Nipple Straight	9323
13	2	M8 x 12 Grub Screw	82155
14	1	10mm HD Flat Washer	9040
15	1	10mm Spring Washer	9041
16	1	M10 Nut	9141
17	1	4000 Drive Leg Tensioner Bolt	A2580-05
18	4	M6 x 16 Bolt	8208H
19	4	6mm Spring Washer	9021
20	2	6mm Flat Washer	9023
21	4	M6 Nut	9121
22	4	6mm Fender Washer	9022
23	1	1/2" Chain Half Link	ZCH1/2L
24	1	1/2" Chain Joiner	ZCH1/2J

AITCHISON INDUSTRIES

EXPLODED VIEW DRAWING

PRODUCT: *Drive Leg Setup Parts*

DRAWN BY: Phil.W
DATE: 17/07/2013

A2580-ASSY

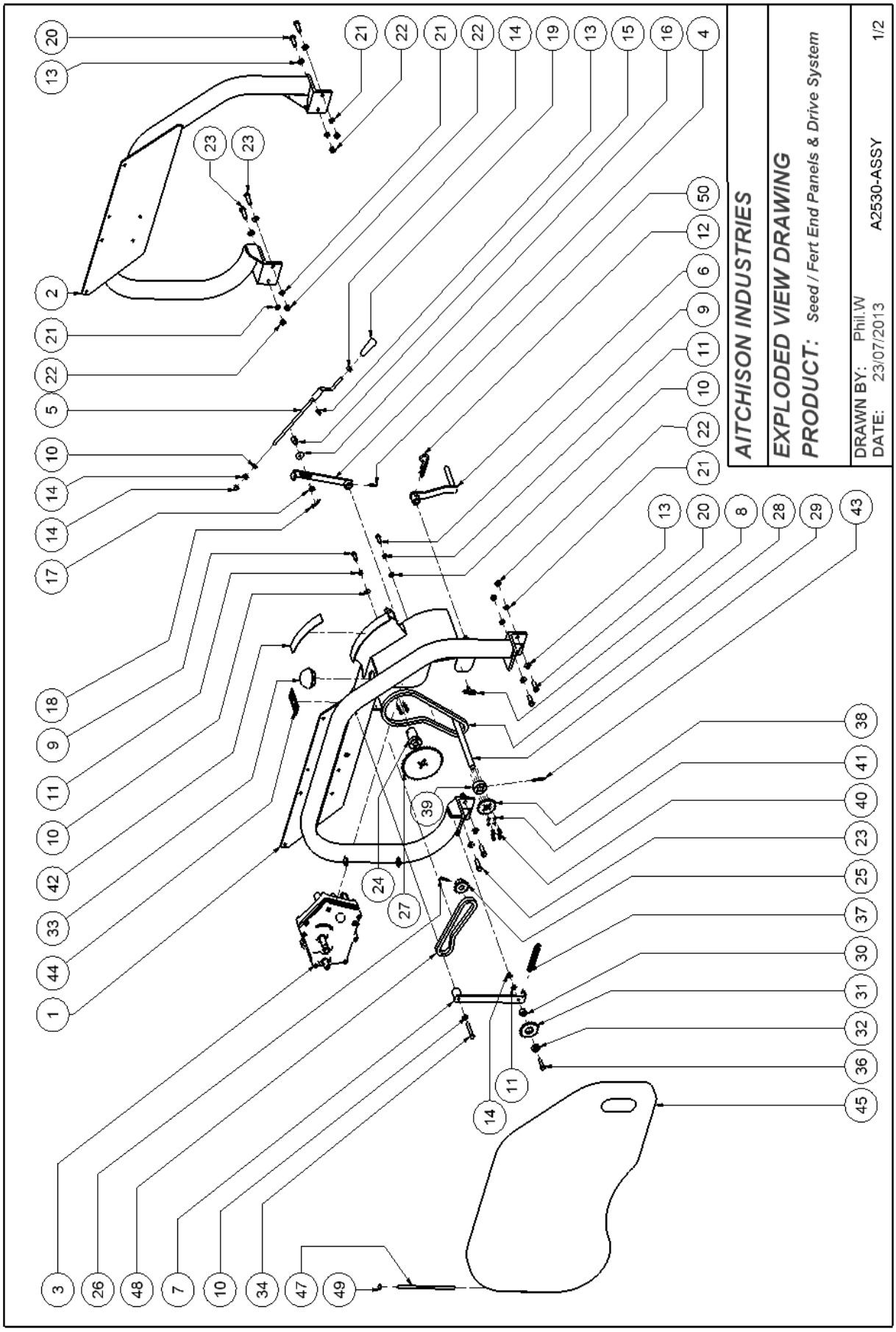
AITCHISON INDUSTRIES
EXPLODED VIEW DRAWING
PRODUCT: Seed / Fert End Panels & Drive System
DRAWN BY: Phil.W
DATE: 23/07/2013
A2530-ASSY
1/2

Parts List				Parts List			
ITEM	QTY	DESCRIPTION	PART NUMBER	ITEM	QTY	DESCRIPTION	PART NUMBER
1	1	4000 Seed & Fert D-End Panel Assembly	A2531	27	1	38T Plate Sprocket ZP	A2344
2	1	4000 Seed & Fert Non-D-End Panel Assembly	A2532	28	1	4000 Gear Box Chain	A2530-06
3	1	GF/Roller Gearbox Assembly	A2342	29	1	4000 Seed&Fert Lay Shaft	A2530-01
4	1	Gearbox Calibration Pointer Assembly	A3570-04	30	1	4000 Seed&Fert G-B Tensioner Spacer	A2530-02
5	1	Seed Adjustor Lever Assembly	A2333	31	1	17T Plate Sprocket Tensioner	A2350-01
6	1	Seed Calibration Handle	A230-25	32	1	6200 Bearing	9219
7	1	4000 Gear Box Tensioner Arm Assembly	A2533	33	1	65mm Plastic Cap	A3719-03
8	1	M8 Anti-Luce Fastener	A2821-07	34	1	M10 x 70 Bolt	8423H
9	3	M10 x 30 Bolt	8415H	35	1	M10 Nyloc Nut	9142
10	6	10 mm Flat Washer	9042	36	1	M10 x 45 Bolt	8404H
11	4	10mm Spring Washer	9041	37	1	Seed Agitator Spring	A2338
12	1	5mm R Clip	9289	38	1	17T Plate Sprocket 1/2"	A2347
13	9	12mm Flat Washer	9051	39	1	Sprocket Boss 3000 ZP	A2343-01
14	4	M10 Nut	9141	40	8	M6 x 20 S/S Cap Screw	8202S
15	1	Swivel Collar	A2334	41	8	6mm Spring Washer	9021
16	1	M10 Fender Washer	9037	42	1	Gearbox Calibration Decal	D3032
17	1	10mm HD Flat Washer	9040	43	1	6 x 50 Roll Pin	9262
18	1	2mm R Clip	9282	44	1	Decal 4000 Rodent Stop	D4001
19	1	Plastic Knob Long	A2332	45	1	4000 Seed & Fert Drive Cover	A2530-04
20	4	M12 x 40 Bolt	8503H	46	1	M8 Nut	9106
21	8	12mm Spring Washer	9052	47	1	4000 End Panel Hinge Pin	A2530-05
22	8	M12 Nut	9152	48	1	GB to SB Drive Chain	A2530-07
23	4	M12 x 45 Bolt	8504H	49	1	M10 Starlock Washer (Capped)	9045
24	1	70mm Sprocket Boss	A2070-01	50	1	6 x 30 Roll Pin	9250
25	1	13T Sprocket 1/2" Pitch Boss 20ID	A2339-01	51	2	1/2" Chain Half Link	ZCH1/2J
26	2	6 x 40 Roll Pin	9251	52	2	1/2" Chain Joiner	ZCH1/2L

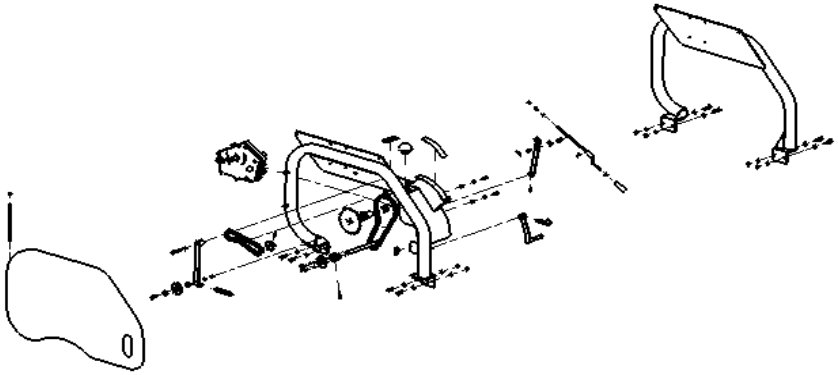

AITCHISON INDUSTRIES

EXPLODED VIEW DRAWING

PRODUCT: *Seed / Fert End Panels & Drive System*
(Part Numbers)

DRAWN BY: Phil.W
DATE: 23/07/2013 A2530-ASSY 2/2

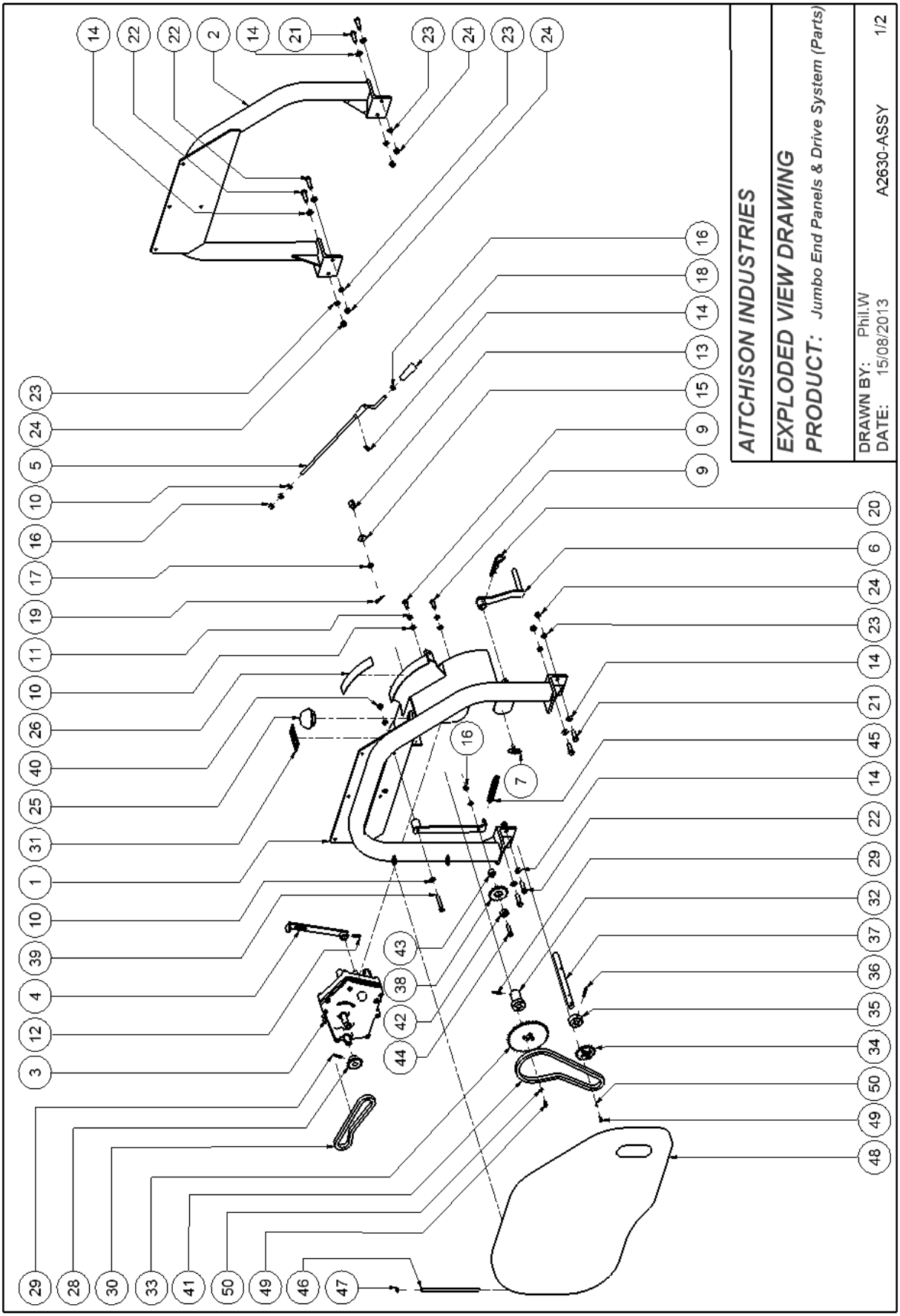
AITCHISON INDUSTRIES
EXPLODED VIEW DRAWING
PRODUCT: Jumbo End Panels & Drive System (Parts)
DRAWN BY: Phil.W
DATE: 15/08/2013
A2630-ASSY
1/2

Parts List				Parts List			
ITEM	QTY	DESCRIPTION	PART NUMBER	ITEM	QTY	DESCRIPTION	PART NUMBER
1	1	4000 Jumbo Drive End Panel Assembly	A2631	27	1	M8 Nut	9106
2	1	4000 Jumbo N-Drive End Panel Assembly	A2632	28	1	13T Sprocket 1/2" Pitch Boss 20ID	A2339-01
3	1	GF/Roller Gearbox Assembly	A2342	29	2	6 x 40 Roll Pin	9251
4	1	Gearbox Calibration Pointer Assembly	A3570-04	30	1	GB to SB Drive Chain	A2530-07
5	1	Seed Adjustor Lever Assembly	A2333	31	1	Decal 4000 Rodent Stop	D4001
6	1	Seed Calibration Handle	A230-25	32	1	70mm Sprocket Boss	A2070-01
7	1	M8 Anti-Luce Fastener	A2821-07	33	1	38T Plate Sprocket ZP	A2344
8	1	4000 Gear Box Tensioner Arm Assembly	A2533	34	1	17T Plate Sprocket 1/2"	A2347
9	3	M10 x 30 Bolt	8415H	35	1	Sprocket Boss 3000 ZP	A2343-01
10	6	10 mm Flat Washer	9042	36	1	6 x 50 Roll Pin	9262
11	4	10mm Spring Washer	9041	37	1	4000 Jumbo Lay Shaft	A2630-01
12	1	6 x 30 Roll Pin	9250	38	1	17T Plate Sprocket Tensioner	A2350-01
13	1	Swivel Collar	A2334	39	1	M10 x 70 Bolt	8423H
14	9	12mm Flat Washer	9051	40	1	M10 Nyloc Nut	9142
15	1	M10 Fender Washer	9037	41	1	4000 Gear Box Chain	A2530-06
16	4	M10 Nut	9141	42	1	6200 Bearing	9219
17	1	10mm HD Flat Washer	9040	43	1	4000 Seed&Fert G-B Tensioner Spacer	A2530-02
18	1	Plastic Knob Long	A2332	44	1	M10 x 45 Bolt	8404H
19	1	2mm R Clip	9282	45	1	Seed Agitator Spring	A2338
20	1	5mm R Clip	9289	46	1	4000 End Panel Hinge Pin	A2530-05
21	4	M12 x 40 Bolt	8503H	47	1	M10 Star Cap	9045
22	4	M12 x 45 Bolt	8504H	48	1	4000 Jumbo Drive Cover	A2630-02
23	8	12mm Spring Washer	9052	49	8	M6 x 20 S/S Cap Screw	8202S
24	8	M12 Nut	9152	50	8	6mm Spring Washer	9021
25	1	65mm Plastic Cap	A3719-03	51	1	1/2" Chain Half Link	ZCH1/2L
26	1	Gearbox Calibration Decal	D3032	52	1	1/2" Chain Joiner	ZCH1/2J

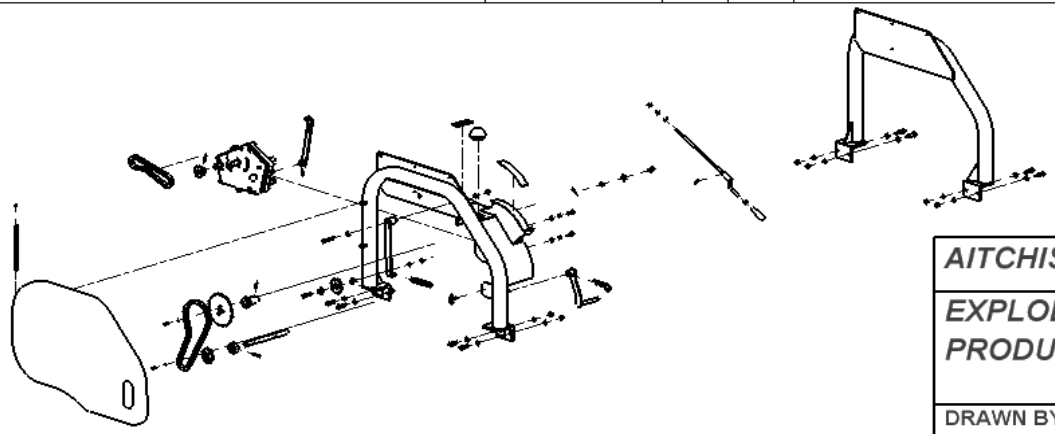

AITCHISON INDUSTRIES

EXPLODED VIEW DRAWING

PRODUCT: *Jumbo End Panels & Drive System* (Numbers)

DRAWN BY: Phil.W
DATE: 16/08/2013

A2630-ASSY

2/2

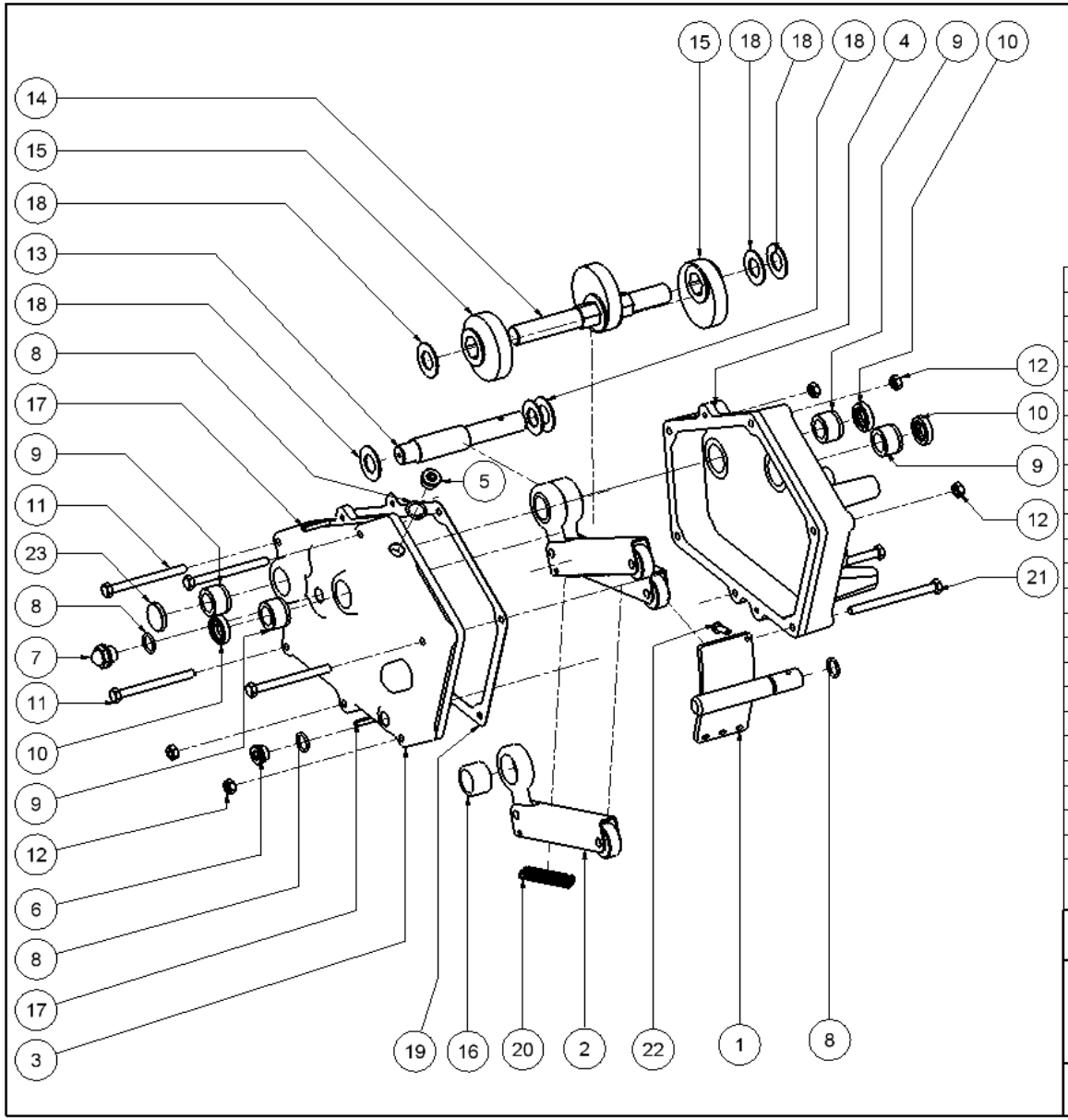

Parts List			
ITEM	QTY	DESCRIPTION	PART NUMBER
1	1	Calibration Arm Assembly	A2342-17
2	3	Rocker Arm Assy -Steel Roller	A2274-10
3	1	Front Gearbox Housing	A2342-01
4	1	Rear Gearbox Housing	A2342-03
5	1	Gearbox Hex Head Bung	A23100
6	1	Bung 3/8" BSPT	A23100-01
7	1	Gearbox Oil Sight Glass	A2390
8	3	O-Ring 16x2.5N70	9243
9	4	Bronze Bush	A2342-06
10	3	Oil Seal 20 x 30 x 7	9229
11	4	M8x90 Bolt	8304H
12	6	M8 Nut	9106
13	1	Shaft - Bearing Output	A2342-10
14	1	Cam Input Shaft	A2342-08
15	3	Cam - Nylon	A2342-22
16	3	One Way Bearing	9222
17	2	6 x 30 Roll Pin	9250
18	6	Flat Washer M20x38x1.6ZP	9074
19	1	Seedmatic Gearbox Gasket	A2342-05
20	3	Spring - Gearbox	A23104
21	2	M8 x 100 Bolt	8307H
22	1	M6x16 Bolt	8208H
23	1	Steel Expansion Plug - Cup 30mm	A2342-09

AITCHISON INDUSTRIES

EXPLODED VIEW DRAWING

PRODUCT: *Seedmatic Gearbox Parts*

DRAWN BY: Phil.W
DATE: 10/08/2011

A2342

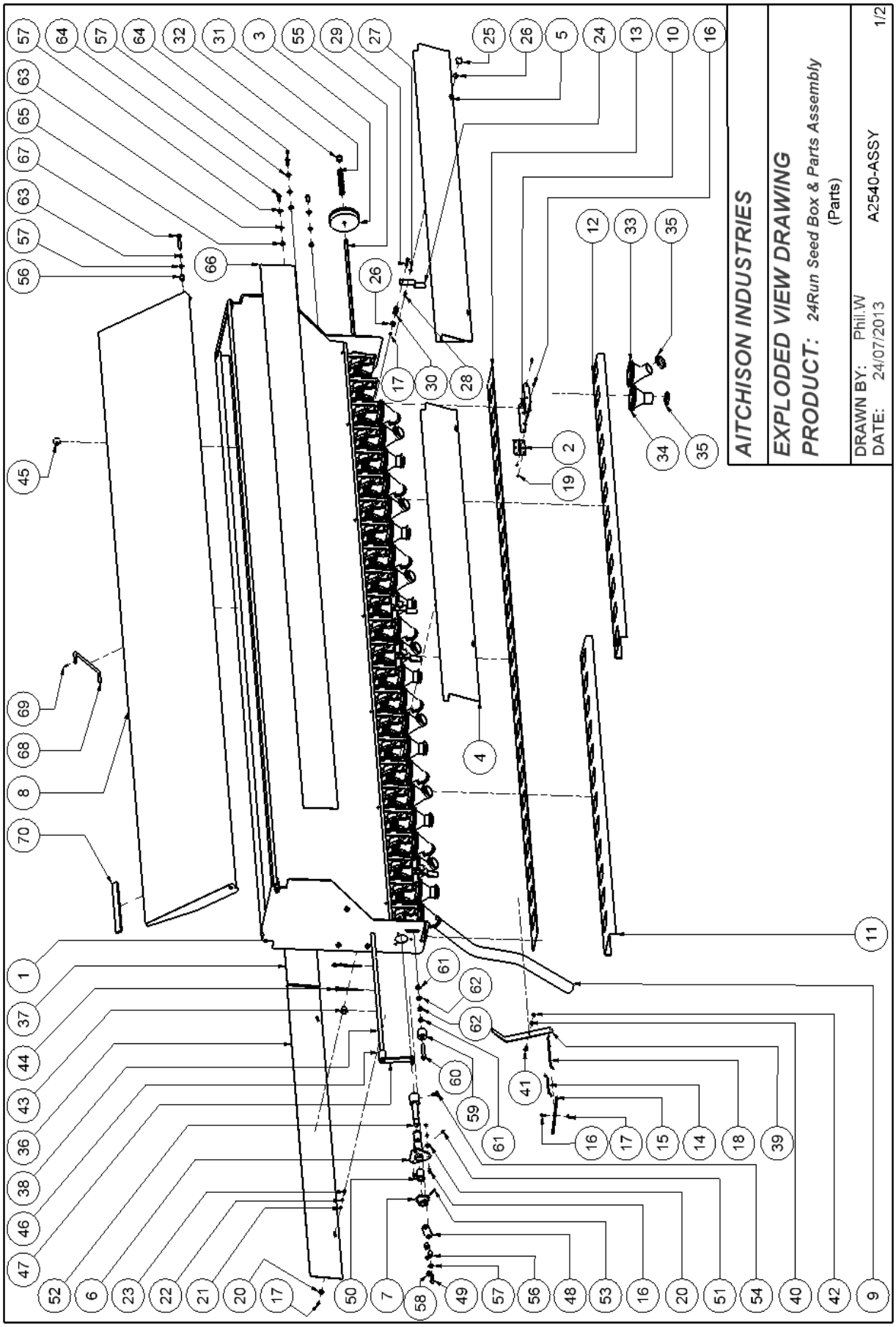
AITCHISON INDUSTRIES
EXPLODED VIEW DRAWING
PRODUCT: 24Run Seed Box & Parts Assembly
(Parts)
DRAWN BY: Phil.W
DATE: 24/07/2013
A2540-ASSY
1/2

ITEM	QTY	DESCRIPTION	PART NUMBER	ITEM	QTY	DESCRIPTION	PART NUMBER
1	1	24Run Seed Box Assembly	A2541	36	1	24Run Seed D-S Rear Inspection Panel	A2540-08
2	4	3" x 2" S/S Butt Hinge	A23805	37	1	24Run Seed Non-D-S Rear Inspection Panel	A2540-09
3	24	Sponge Pad & Disc	A2364	38	1	4000 24Run Agitator Shaft	A2540-10
4	1	24Run Front D-S Calibration Panel Assembly	A2542	39	1	4000 End Panel Rodent Handle	A2540-11
5	1	24Run Front Non-D-S Calibration Panel Assembly	A2543	40	1	8mm Flat Washer	9031
6	1	Seed Shaft Mount	A2337	41	1	M8 x 20 Bolt	8311H
7	1	13T Sprocket 1/2" Agitator Boss	A28025	42	1	M8 Nyloc Nut	9105
8	1	4000 Series Seed Lid Assembly (24Run)	A2544	43	6	S 210M Flanged Bush	A2357
9	1	35mm Seed Dropper Hose / Meter	A2384-01	44	24	Agitator Shart R Clip	A2359
10	4	4000 Series Blank Off Plate Retainer	A2540-01	45	1	16mm Locking Collar	A2360
11	1	4000 Series D-End Seed Tray (24Run)	A2540-02	46	1	Agitator Boss	A28034-02
12	1	4000 Series Non-D-End Seed Tray (24Run)	A2540-03	47	1	4000 Adjatator Shaft Arm	A2540-12
13	1	4000 Series Rodent Stop Slide (24Run)	A2540-04	48	1	Agitator Arm Link	A28008
14	1	4000 Series Rodent Stop Link Wire	A2540-05	49	2	Agitator Link Bolt	A2618-04
15	1	4000 Series Rodent Stop Link Arm	A2540-06	50	2	S 15 Flanged Bush	A2352
16	16	M6x20 Bolt	8205H	51	1	M6 Grease Nipple Straight	9323
17	9	M6 Nyloc Nut	9109	52	1	Seed Shaft Axle	A2361
18	1	4000 Series Rodent Stop Lever Wire	A2540-07	53	1	6 x 40 Roll Pin	9251
19	16	6-8 S/S Rivet	9302	54	1	M10 x 20 Bolt	8419H
20	7	6mm Fender Washer	9022	55	1	4000 24Run Seed Shaft	A2540-13
21	19	M6 Nut	9121	56	4	S 206M Flanged Bush	A2355
22	19	6mm Spring Washer	9021	57	10	10 mm Flat Washer	9042
23	4	M6 x 25 Bolt	8213H	58	1	M10 Nyloc Nut	9142
24	4	Seed Tray Clip	A3040-07	59	1	Nylon Tensioner Roller	A2336-04
25	4	M6 Cross Knob	9122	60	1	M12 x 65 Bolt	8507H
26	8	6mm S/S Fender Washer	9022S	61	2	M12 Nut	9152
27	4	M6 S/S Nut	9121S	62	2	12mm Flat Washer	9051
28	4	M6 x 20 S/S Bolt	8205S	63	8	10mm Spring Washer	9041
29	4	M6 x 50 SS Bolt	8210S	64	6	M10 x 25 Bolt	8418H
30	4	Agrispred Spinner Disc Spring	A4619	65	6	M10 Nut	9141
31	24	Seed Pad Spring	A2280-10	66	1	3M Yellow Panel Decal	D1513
32	24	S 9 Plastic Bush	A2280-11	67	2	M10 x 65 Bolt	8417H
33	16	Fert Cup Angled	A2290-13	68	1	Lid Stay	A2354
34	8	Fert Cup Straight	A2290-12	69	1	3 x 20 Roll Pin	9267
35	24	35mm Crey Clip	A2370	70	3	Buffer Pad	A2375

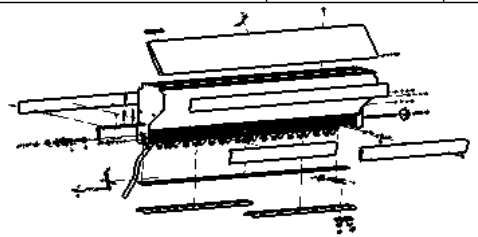

AITCHISON INDUSTRIES

EXPLODED VIEW DRAWING

PRODUCT: *24Run Seed Box & Parts Assembly*
(Numbers)

DRAWN BY: Phil.W
DATE: 24/07/2013

A2540-ASSY

2/2

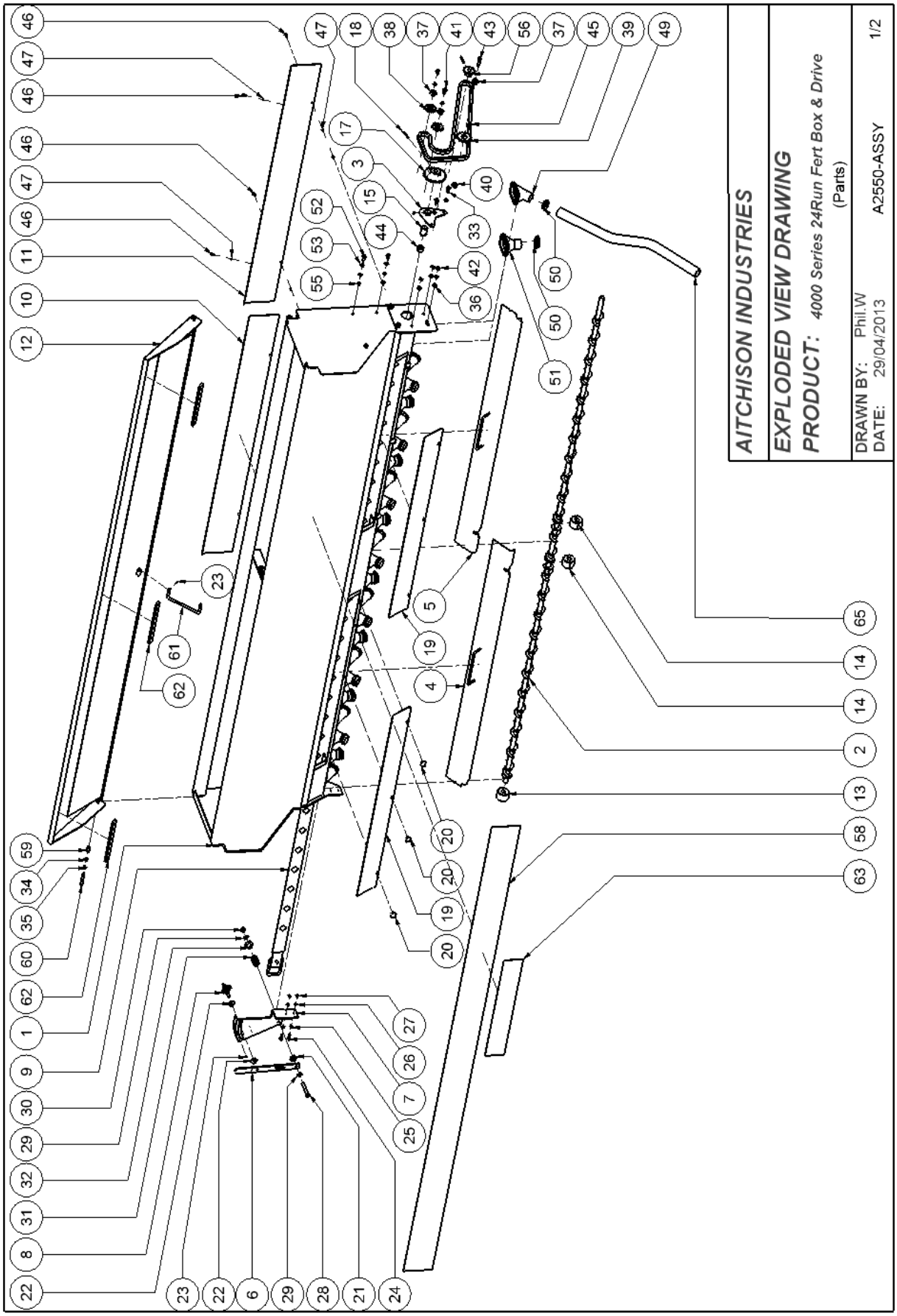
AITCHISON INDUSTRIES
EXPLODED VIEW DRAWING
PRODUCT: 4000 Series 24Run Fert Box & Drive
(Parts)
DRAWN BY: Phil.W
DATE: 29/04/2013
A2550-ASSY
1/2

Parts List				Parts List			
ITEM	QTY	DESCRIPTION	PART NUMBER	ITEM	QTY	DESCRIPTION	PART NUMBER
1	1	4000 24Run Complete Fert Box Assembly	A2551	35	7	10mm Spring Washer	9041
2	1	4000 24Run Fert Auger Assembly	A2554	36	3	M10 Nut	9141
3	1	4000 Fert Auger Drive Mount Assembly	A2555	37	3	6200 Bearing	9219
4	1	4000 24Run LH Fert Baffle Assembly	A2556LH	38	2	13T 1/2" Pitch Idler Sprocket	A2550-05
5	1	4000 24Run RH Fert Baffle Assembly	A2556RH	39	1	17T Plate Sprocket Tensioner	A2350-01
6	1	Fertiliser Control Arm	A23142	40	1	4000 Fert Auger Tensioner Boss	A2550-02
7	1	Fertiliser Control	A23143	41	2	M10 x 20 Bolt	8419H
8	1	M10 Fert Adjuster Handle	A23145	42	1	10mm HD Flat Washer	9040
9	1	4000 24Run Fert Slide Assembly	A2558	43	1	M10 x 45 Bolt	8404H
10	1	4000 24Run LH Fert Slide Cover Assembly	A2560LH	44	1	7/8" Shaft Collar (22mm)	A23148
11	1	4000 24Run RH Fert Slide Cover Assembly	A2560RH	45	1	4000 Fert Box Drive Chain	A2550-04
12	1	4000 Series Seed Lid Assembly (24Run)	A2544	46	8	M6 x 16 Bolt	8208H
13	1	End Fertiliser Auger Boss	A23154	47	8	6mm Spring Washer	9021
14	2	Center Auger Block Boss	A23153	48	4	M6 Nut	9121
15	1	S 15 Flanged Bush	A2352	49	16	Fert Cup Angled	A2290-13
16	1	M6 Grease Nipple Straight	9323	50	24	35mm Crey Clip	A2370
17	1	27T Sprocket Half Inch Pitch 7/8" Bore	A23130	51	8	Fert Cup Straight	A2290-12
18	1	6 x 50 Roll Pin	9262	52	6	M10 x 25 S/S Bolt	8418S
19	2	4000 24Run Trough Removable Panel	A2550-01	53	6	10mm S/S Flat Washer	9039S
20	6	M6 Cross Knob	9122	54	6	10mm S/S Spring Washer	9041S
21	1	10mm Spacer	A23142-01	55	6	M10 S/S Nut	9141S
22	2	M10 Fender Washer	9037	56	1	13T Sprocket 1/2" Pitch Boss 20ID	A2339-01
23	2	3 x 20 Roll Pin	9267	57	1	6 x 40 Roll Pin	9251
24	2	M8 x 25 Bolt	8305H	58	1	3M Yellow Panel Decal	D1513
25	2	8mm Flat Washer	9031	59	2	S 206M Flanged Bush	A2355
26	2	8mm Spring Washer	9030	60	2	M10 x 65 Bolt	8417H
27	2	M8 Nut	9106	61	1	Lid Stay	A2354
28	1	M12 x 90 Bolt	8524H	62	3	Buffer Pad	A2375
29	2	12mm Flat Washer	9051	63	1	Decal "SEEDMATIC"	D1510
30	1	M12 Nyloc Nut	9151	64	1	Decal "4124CT"	D4002
31	1	Fert Leaver Spring	A23146	65	1	35mm Seed Dropper Hose / Meter	A2384-01
32	1	S 179M Plastic Bush	A23142-02	66	1	1/2" Chain Joiner	ZCH1/2J
33	2	M10 x 25 Bolt	8418H	67	1	1/2" Chain Half Link	ZCH1/2L
34	4	10 mm Flat Washer	9042				

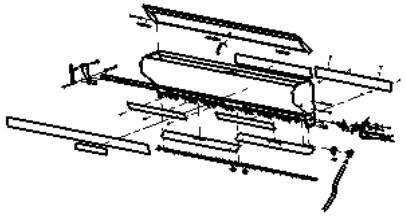

AITCHISON INDUSTRIES

EXPLODED VIEW DRAWING

PRODUCT: *4000 Series 24Run Fert Box & Drive* (Numbers)

DRAWN BY: Phil.W
DATE: 29/04/2013

A2550-ASSY 2/2

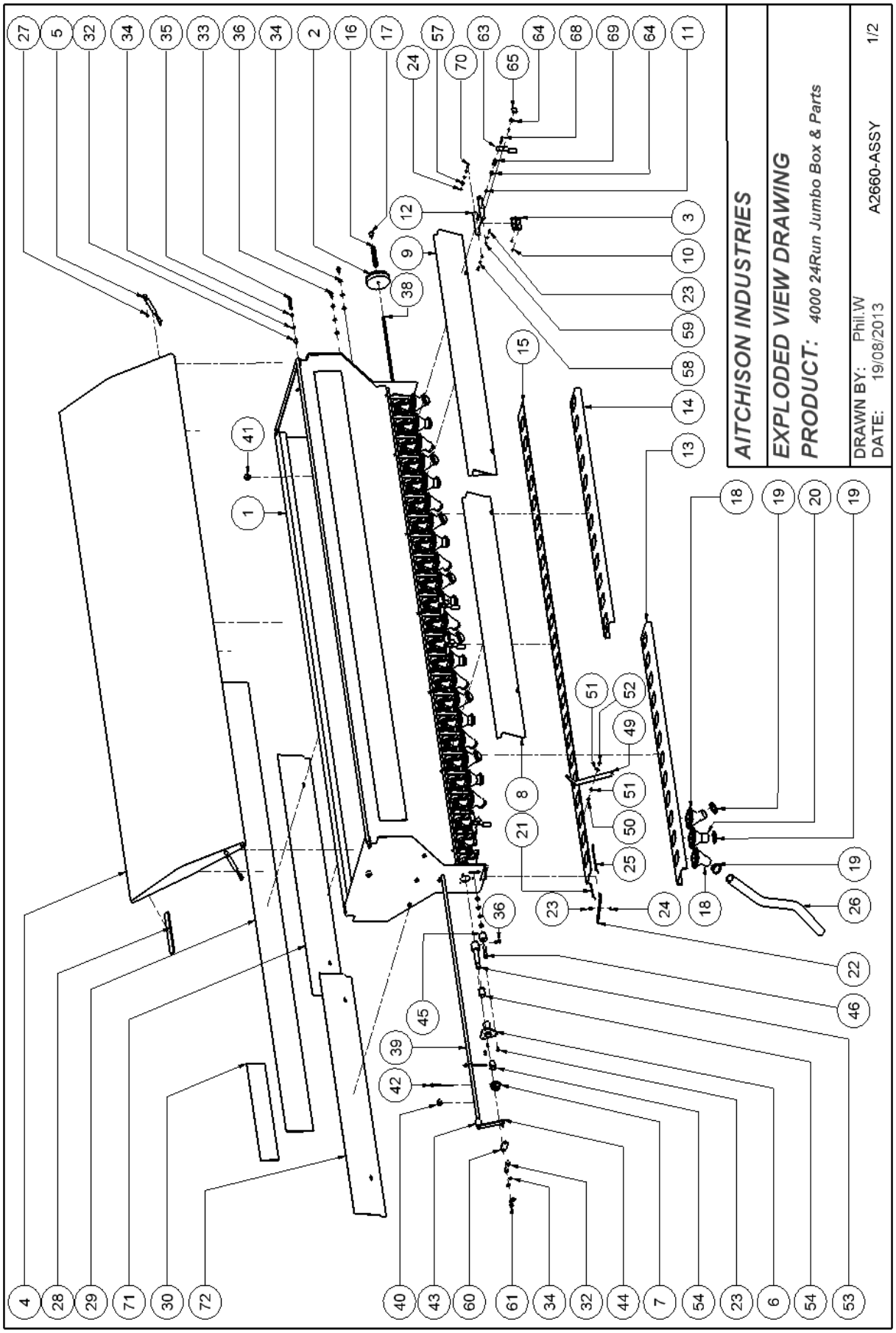
AITCHISON INDUSTRIES
EXPLODED VIEW DRAWING
PRODUCT: 4000 24Run Jumbo Box & Parts
DRAWN BY: Phil.W
DATE: 19/08/2013
A2660-ASSY
1/2

ITEM	QTY	DESCRIPTION	PART NUMBER	ITEM	QTY	DESCRIPTION	PART NUMBER
1	1	24Run Jumbo Box Assembly (4000)	A2661	37	8	M10 Nut	9141
2	24	Sponge Pad & Disc	A2364	38	1	4000 24Run Seed Shaft	A2540-13
3	4	3" x 2" S/S Butt Hinge	A23805	39	1	4000 24Run Agitator Shaft	A2540-10
4	1	4000 Series Jumbo Lid Assembly (24Run)	A2664	40	6	S 210M Flanged Bush	A2357
5	2	Ezy Lift Gas Stay	A3041-02	41	1	16mm Locking Collar	A2360
6	1	Seed Shaft Mount	A2337	42	24	Agitator Shart R Clip	A2359
7	1	13T Sprocket 1/2" Agitator Boss	A28025	43	1	Agitator Boss	A28034-02
8	1	24Run Front D-S Calibration Panel Assembly	A2542	44	1	4000 Adjatator Shaft Arm	A2540-12
9	1	24Run Front Non-D-S Calibration Panel Assembly	A2543	45	1	Nylon Tensioner Roller	A2336-04
10	8	6-8 S/S Rivet	9302	46	1	M12 x 65 Bolt	8507H
11	2	M6 S/S Nyloc Nut	9109S	47	2	M12 Nut	9152
12	4	4000 Series Blank Off Plate Retainer	A2540-01	48	2	12mm Flat Washer	9051
13	1	4000 Series D-End Seed Tray (24Run)	A2540-02	49	1	4000 End Panel Rodent Handle	A2540-11
14	1	4000 Series Non-D-End Seed Tray (24Run)	A2540-03	50	1	M8 x 20 Bolt	8311H
15	1	4000 Series Rodent Stop Slide (24Run)	A2540-04	51	2	8mm Flat Washer	9031
16	24	Spring - Moore Sponge Pad	A2280-10	52	1	M8 Nyloc Nut	9105
17	24	S 9 Plastic Bush	A2280-11	53	1	Seed Shaft Axle	A2361
18	16	Fert Cup Angled	A2290-13	54	2	S 15 Flanged Bush	A2352
19	24	35mm Crey Clip	A2370	55	1	6 x 40 Roll Pin	9251
20	8	Fert Cup Straight	A2290-12	56	1	M6 Stright Grease Nipple	9323
21	1	4000 Series Rodent Stop Link Wire	A2540-05	57	7	6mm Fender Washer	9022
22	1	4000 Series Rodent Stop Link Arm	A2540-06	58	19	6mm Spring Washer	9021
23	16	M6x20 Bolt	8205H	59	19	M6 Nut	9121
24	5	M6 Nyloc Nut	9109	60	1	Agitator Arm Link	A28008
25	1	4000 Series Rodent Stop Lever Wire	A2540-07	61	2	Agitator Link Bolt	A2618-04
26	1	35mm Seed Dropper Hose / Meter	A2384-01	62	1	M10 Nyloc Nut	9142
27	2	M8 Half Nut	9103	63	4	Seed Tray Clip	A3040-07
28	3	Buffer Pad	A2375	64	8	6mm S/S Fender Washer	9022S
29	2	3M Yellow Panel Decal	D1513	65	4	M6 Cross Knob	9122
30	1	Decal "SEEDMATIC"	D1510	66	4	M6 S/S Nut	9121S
31	1	Decal "4024J"	D4003	67	4	M6 x 20 S/S Bolt	8205S
32	4	S 206M Flanged Bush	A2355	68	4	M6 x 50 SS Bolt	8210S
33	2	M10 x 65 Bolt	8417H	69	4	Agrispred Spinner Disc Spring	A4619
34	12	10 mm Flat Washer	9042	70	4	M6 x 25 Bolt	8213H
35	10	10mm Spring Washer	9041	71	1	24Run Jumbo Rear Non D-S Inspection Panel	A2660-01
36	9	M10 x 25 Bolt	8418H	72	1	24Run Jumbo Rear D-S Inspection Panel	A2660-02

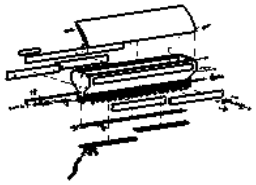

AITCHISON INDUSTRIES

EXPLODED VIEW DRAWING

PRODUCT: ***4000 24Run Jumbo Box Part Numbers***

DRAWN BY: Phil.W
DATE: 19/08/2013

A2660-ASSY

2/2

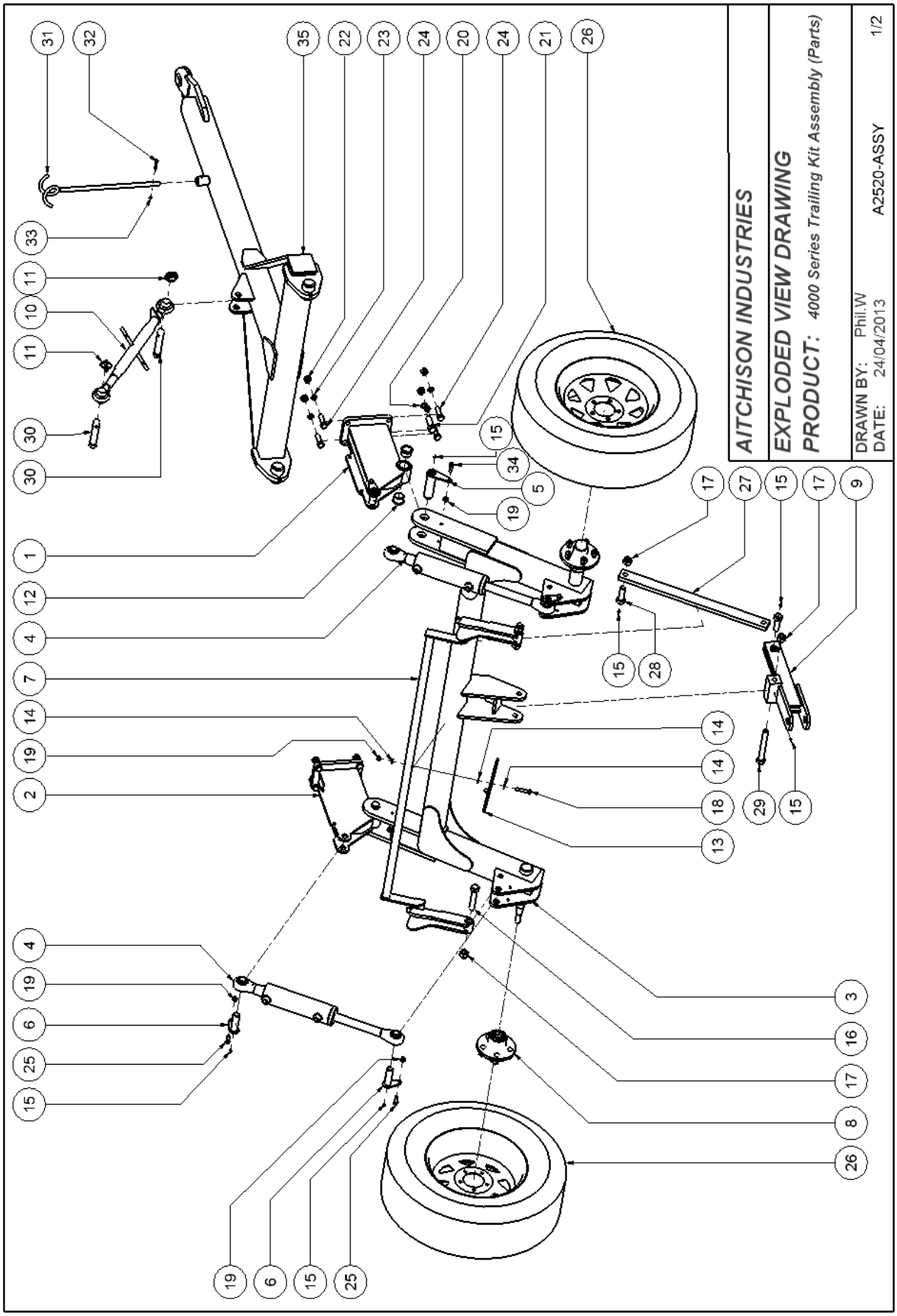
AITCHISON INDUSTRIES
EXPLODED VIEW DRAWING
PRODUCT: 4000 Series Trailing Kit Assembly (Parts)
DRAWN BY: Phil.W
DATE: 24/04/2013
A2520-ASSY
1/2

Parts List				Parts List			
ITEM	QTY	DESCRIPTION	PART NUMBER	ITEM	QTY	DESCRIPTION	PART NUMBER
1	1	Rear Axle Pivot Mount RH Assembly	A2521RH	19	7	M10 Nyloc Nut	9142
2	1	Rear Axle Pivot Mount LH Assembly	A2521LH	20	2	20mm Spring Washer	9076
3	1	Rear Transport Axle Assembly	A2523	21	2	M20 x 60 Bolt	8712H
4	2	2.5" x 1.25" x 7" Compact Top Link Ram	A2520-03	22	8	M16 Nut	9161
5	2	Rear Axle Pivot Pin Assembly	A2524	23	8	16mm Spring Washer	9061
6	4	Rear Axle Ram Pin Assembly	A2525	24	8	M16 x 55 Bolt	8603H
7	1	Rear Axle Lock Assembly	A2526	25	4	M10 x 30 Bolt	8415H
8	2	Trojan 5 Stud Hub	TR 082030	26	2	235 -70/R15 Wheel Assembly	A3127-01
9	1	Rear Tow Hitch Tounge Assembly	A2527	27	1	Rear Axle Tow Eye Link	A2520-02
10	1	Cat 2 Turnbuckle	A23189-01	28	2	Rear Axle Towbar Link Bolt	A5185-05
11	2	11mm Lynch Pin	9288	29	1	M20 x 150 Bolt	8702
12	4	FMB 3526DU	A3710-53	30	2	Top Link Pin B76	A23189-02
13	1	Rear Axle Lock Lever	A2520-01	31	1	Hidrolic Hose Pig Tail Pole	A23188-14
14	3	10 mm Flat Washer	9042	32	1	M6 x 45 Bolt	8203H
15	9	M6 Grease Nipple Straight	9323	33	1	M6 Nyloc Nut	9109
16	2	M20 x 100 Bolt	8709H	34	2	M10 x 35 Bolt	8402H
17	5	M20 Nyloc Nut	9122	35	1	4000 Drawbar Assembly	A2528
18	1	M10 x 55 Bolt	8427H	37	1	Trailing Hydraulic Hose Kit	A3127-02

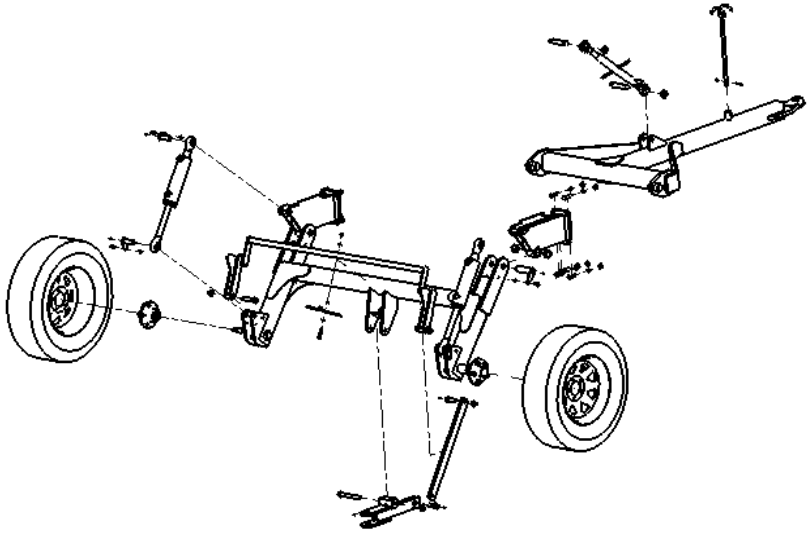

AITCHISON INDUSTRIES

EXPLODED VIEW DRAWING

PRODUCT: *4000 Series Trailing Kit (Part Numbers)*

DRAWN BY: Phil.W
DATE: 24/04/2013

A2520-ASSY

2/2

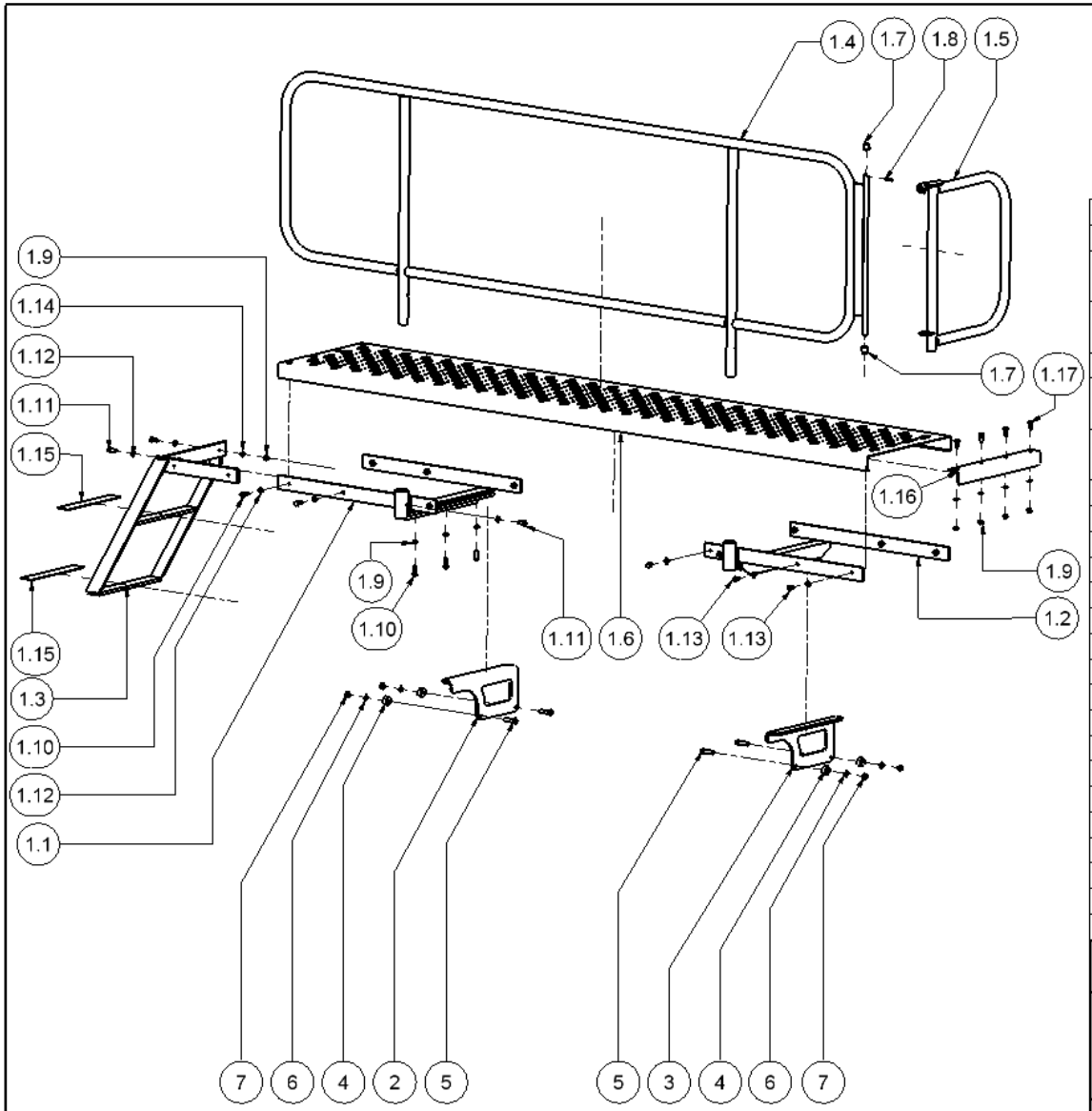

Parts List			
ITEM	QTY	DESCRIPTION	PART NUMBER
1.1	1	8000 Series Safety Rail Clamp LH Assembly	A3107L
1.2	1	8000 Series Safety Rail Clamp RH Assembly	A3107R
1.3	1	Treadboard Step.	A3004
1.4	1	8000 Series Main Safety Rail Assembly	A3108
1.5	1	8000 Series End Safety Rail Assembly	A3110
1.6	1	2.6m x 0.5m Tread Board	A2249-05
1.7	2	S 210M Flanged Bush	A2357
1.8	1	6 x 30 Roll Pin	9250
1.9	28	M10 Nut	9141
1.10	8	M10 x 30 Bolt	8415H
1.11	4	M10 x 25 Bolt	8418H
1.12	14	10 mm Flat Washer	9042
1.13	10	M10 x 20 Bolt	8419H
1.14	22	10mm Spring Washer	9041
1.15	2	Anti-Slip Tape (Black 50 x 300)	A3107-06
1.16	2	2.6m x 0.5m Tread Board Cap	A257-04
1.17	8	M10 x 25 Coach Bolt	8412
2	1	4000 LH Treadboard Mount	A2570-05
3	1	4000 RH Treadboard Mount	A2570-06
4	4	4000 Treadboard Mount Spacer	A2570-07
5	4	M12 x 45 Bolt	8504H
6	4	12mm Spring Washer	9052
7	4	M12 Nut	9152

AITCHISON INDUSTRIES

EXPLODED VIEW DRAWING

PRODUCT: ***4000 Treadboard Parts Assembly***

DRAWN BY: Phil.W
DATE: 30/07/2013 A2570-ASSY

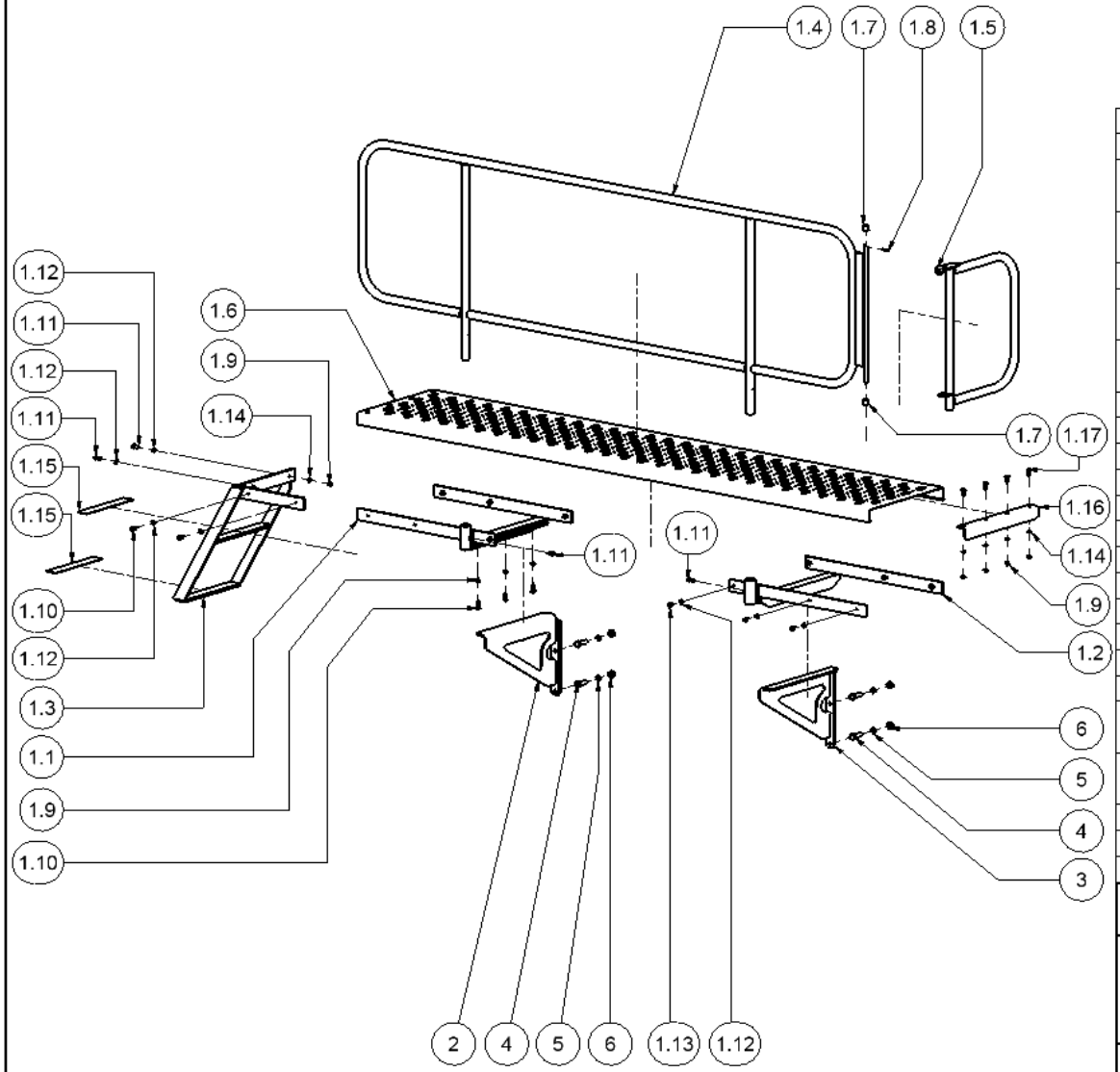

Parts List			
ITEM	QTY	DESCRIPTION	PART NUMBER
1.1	1	8000 Series Safety Rail Clamp LH Assembly	A3107L
1.2	1	8000 Series Safety Rail Clamp RH Assembly	A3107R
1.3	1	Treadboard Step.	A3004
1.4	1	8000 Series Main Safety Rail Assembly	A3108
1.5	1	8000 Series End Safety Rail Assembly	A3110
1.6	1	2.6m x 0.5m Tread Board	A2249-05
1.7	2	S 210M Flanged Bush	A2357
1.8	1	6 x 30 Roll Pin	9250
1.9	28	M10 Nut	9141
1.10	8	M10 x 30 Bolt	8415H
1.11	4	M10 x 25 Bolt	8418H
1.12	14	10 mm Flat Washer	9042
1.13	10	M10 x 20 Bolt	8419H
1.14	22	10mm Spring Washer	9041
1.15	2	Anti-Slip Tape (Black 50 x 300)	A3107-06
1.16	2	2.6m x 0.5m Tread Board Cap	A257-04
1.17	8	M10 x 25 Coach Bolt	8412
2	1	Linkage LH Treadboard Mount Assembly	A2671LH
3	1	Linkage RH Treadboard Mount Assembly	A2671RH
4	4	M16 x 50 Bolt	8616H
5	4	16mm Spring Washer	9061
6	4	M16 Nut	9161

AITCHISON INDUSTRIES

EXPLODED VIEW DRAWING

PRODUCT: ***4000 Linkage Treadboard Parts***

DRAWN BY: Phil.W
DATE: 13/09/2013

A2670-ASSY

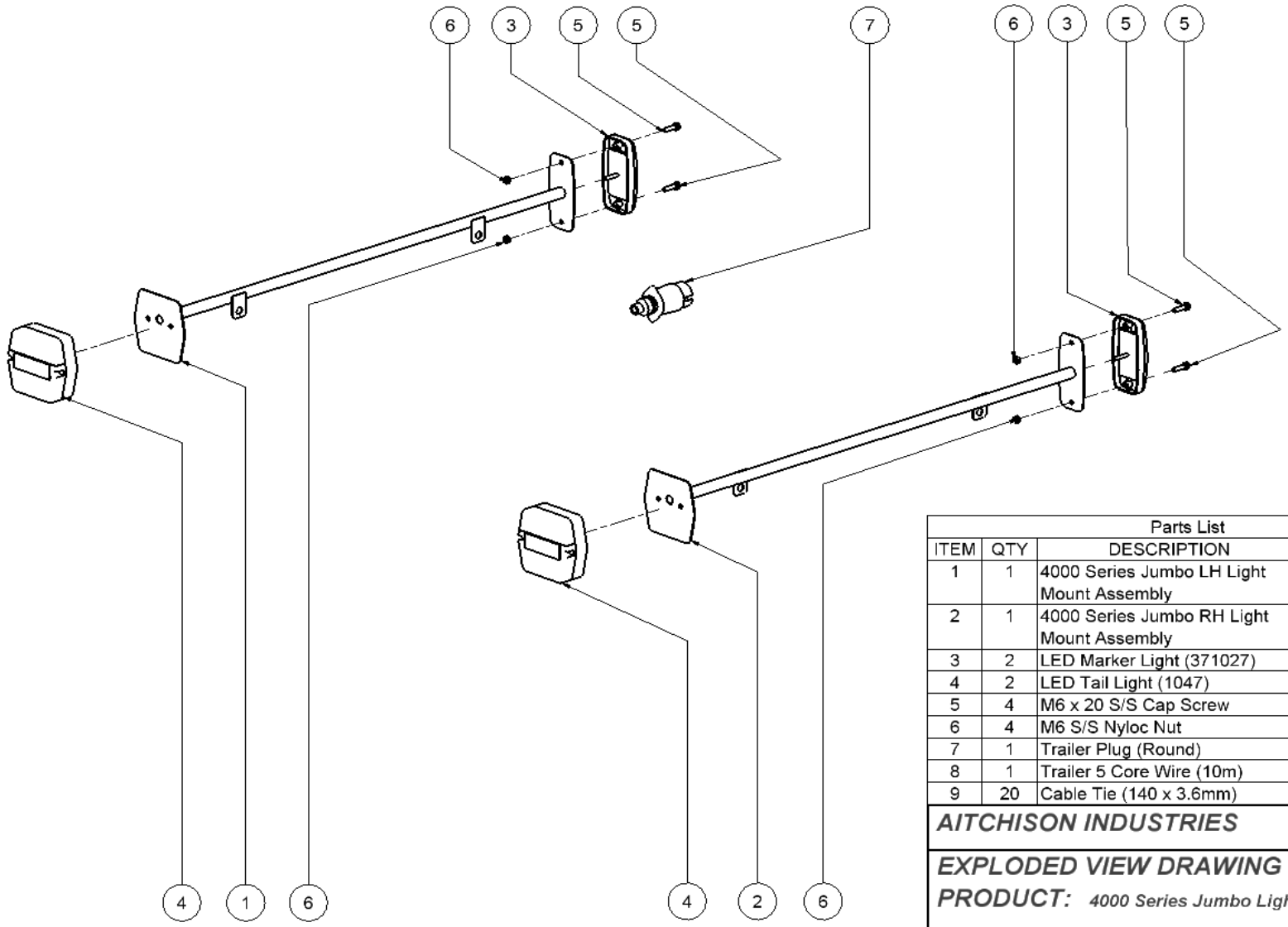

Parts List			
ITEM	QTY	DESCRIPTION	PART NUMBER
1	1	4000 Series Jumbo LH Light Mount Assembly	A2690LH
2	1	4000 Series Jumbo RH Light Mount Assembly	A2690RH
3	2	LED Marker Light (371027)	A3828-09
4	2	LED Tail Light (1047)	A3828-08
5	4	M6 x 20 S/S Cap Screw	8202S
6	4	M6 S/S Nyloc Nut	9109S
7	1	Trailer Plug (Round)	A3828-10
8	1	Trailer 5 Core Wire (10m)	A2247-03
9	20	Cable Tie (140 x 3.6mm)	A2248-16

AITCHISON INDUSTRIES

EXPLODED VIEW DRAWING

PRODUCT: ***4000 Series Jumbo Light Kit***

DRAWN BY: Phil.W
DATE: 22/08/2013

A2690-ASSY

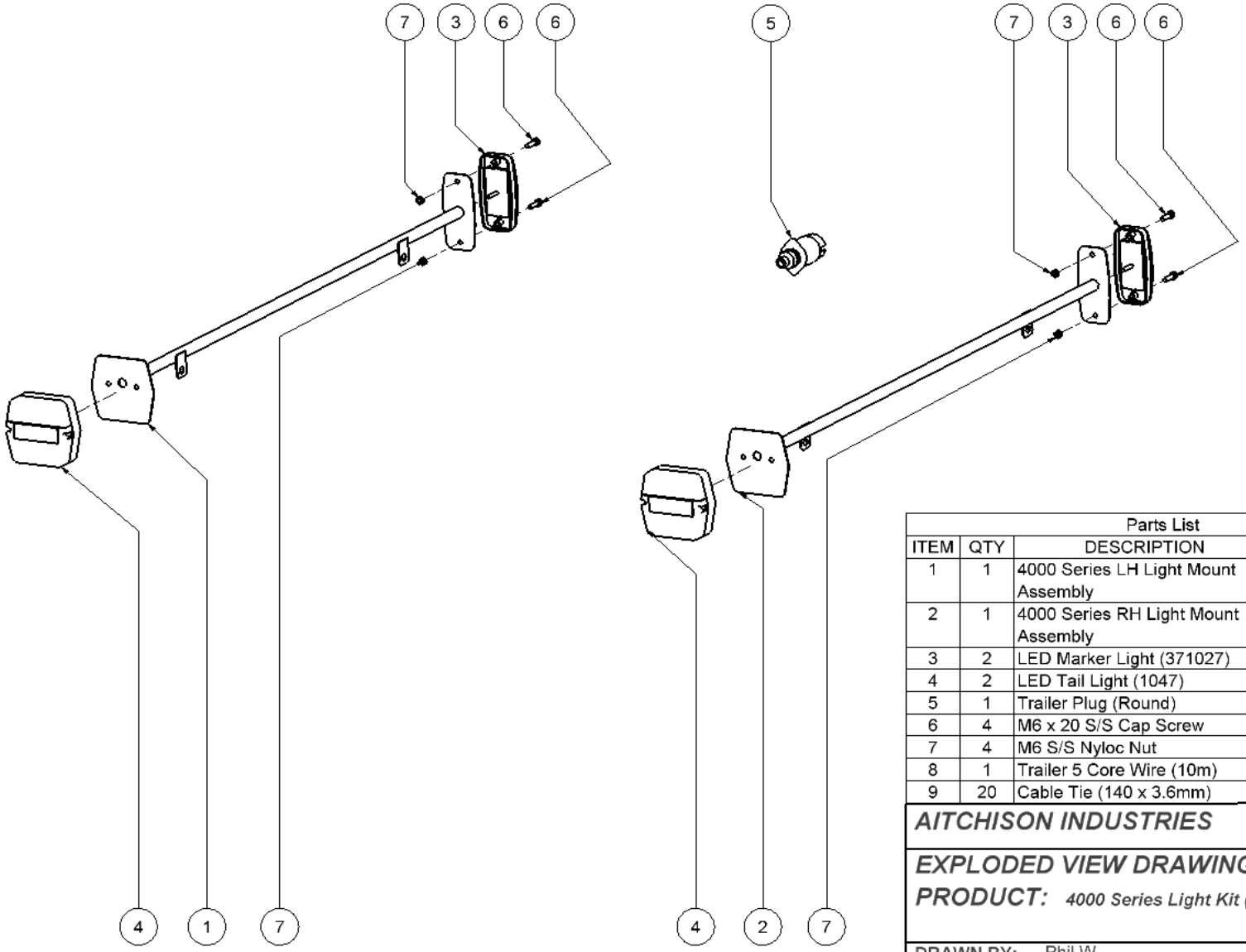

Parts List			
ITEM	QTY	DESCRIPTION	PART NUMBER
1	1	4000 Series LH Light Mount Assembly	A2591LH
2	1	4000 Series RH Light Mount Assembly	A2591RH
3	2	LED Marker Light (371027)	A3828-09
4	2	LED Tail Light (1047)	A3828-08
5	1	Trailer Plug (Round)	A3828-10
6	4	M6 x 20 S/S Cap Screw	8202S
7	4	M6 S/S Nyloc Nut	9109S
8	1	Trailer 5 Core Wire (10m)	A2247-03
9	20	Cable Tie (140 x 3.6mm)	A2248-16

AITCHISON INDUSTRIES

EXPLODED VIEW DRAWING

PRODUCT: *4000 Series Light Kit (Seed & Fert Models)*

DRAWN BY: Phil.W
DATE: 9/08/2013

A2590-ASSY

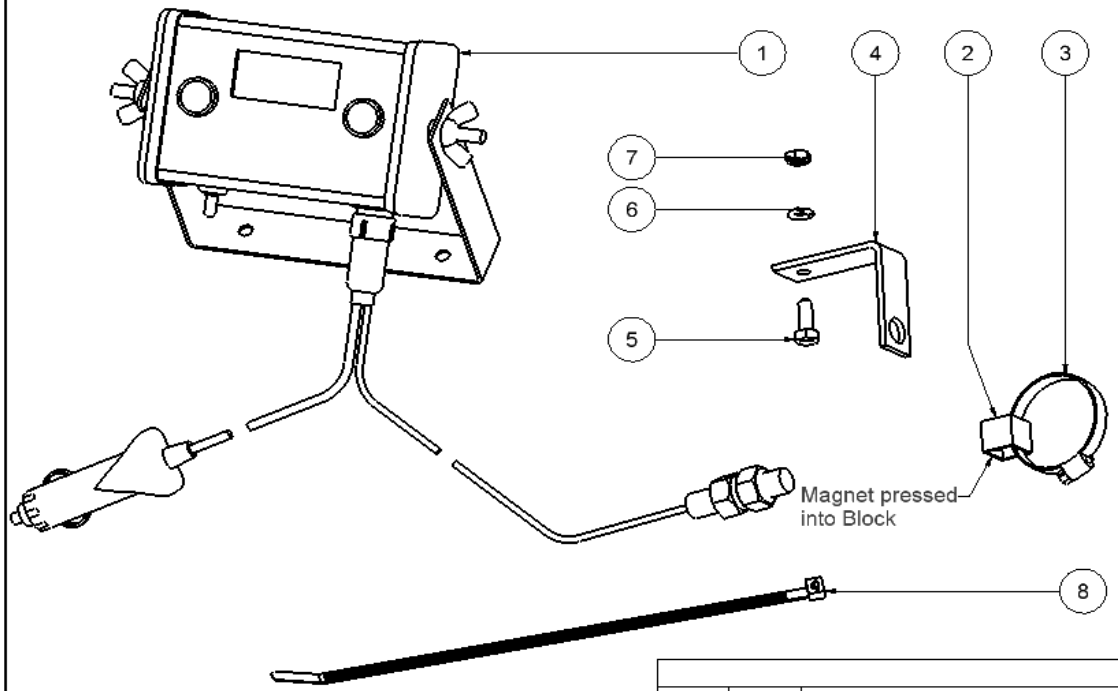

Parts List

ITEM	QTY	DESCRIPTION	PART NUMBER
1	1	Aitchison Areameter	A2389
2	1	Magnet Mounting Block	A2389-01
3	1	25-44 020 Hose Clip	A3730-31
4	1	Sensor Mounting Bracket	A2389-02
5	1	M6 x 16 Bolt	8208H
6	1	6mm Spring Washer	9021
7	1	M6 Nut	9121
8	10	140 x 3.6 Cable Tie	A2248-16

ITEM	QTY	PART NAME	MATERIAL	PART NUMBER

MODIFICATIONS SIGNATURE & DATE

ISSUE

AITCHISON INDUSTRIES

TOLERANCE UNLESS OTHERWISE STATED

NOMINAL DIMENSIONS, MM	0.5 up to 3	over 3 up to 6	over 6 up to 30	over 30 up to 120	over 120 up to 315	over 315 up to 1000	over 1000 up to 3000
TOLERANCE	± 0.1	± 0.2	± 0.5	± 0.8	± 1.0	± 2.0	± 3.0

DO NOT SCALE

ALL DIMENSIONS IN MM

TITLE: Aitchison Areameter Kit Parts

DRAWN: Phil.W

DATE: 30/01/2008

SCALE:

APPROVED

DRAWING NO. A2389

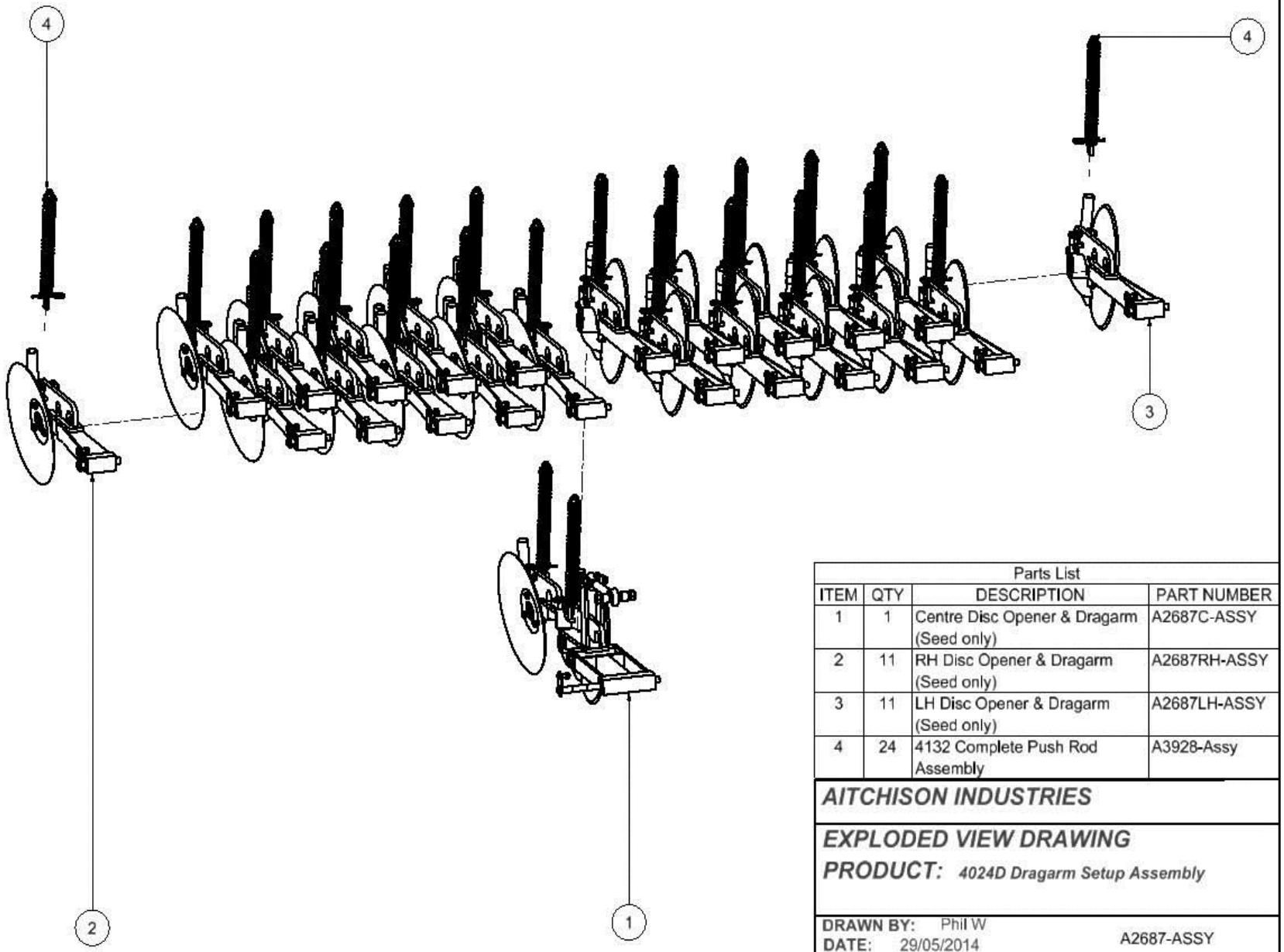

Parts List			
ITEM	QTY	DESCRIPTION	PART NUMBER
1	1	Centre Disc Opener & Dragarm (Seed only)	A2687C-ASSY
2	11	RH Disc Opener & Dragarm (Seed only)	A2687RH-ASSY
3	11	LH Disc Opener & Dragarm (Seed only)	A2687LH-ASSY
4	24	4132 Complete Push Rod Assembly	A3928-Assy

AITCHISON INDUSTRIES

EXPLODED VIEW DRAWING

PRODUCT: ***4024D Dragarm Setup Assembly***

DRAWN BY: Phil W
DATE: 29/05/2014

A2687-ASSY

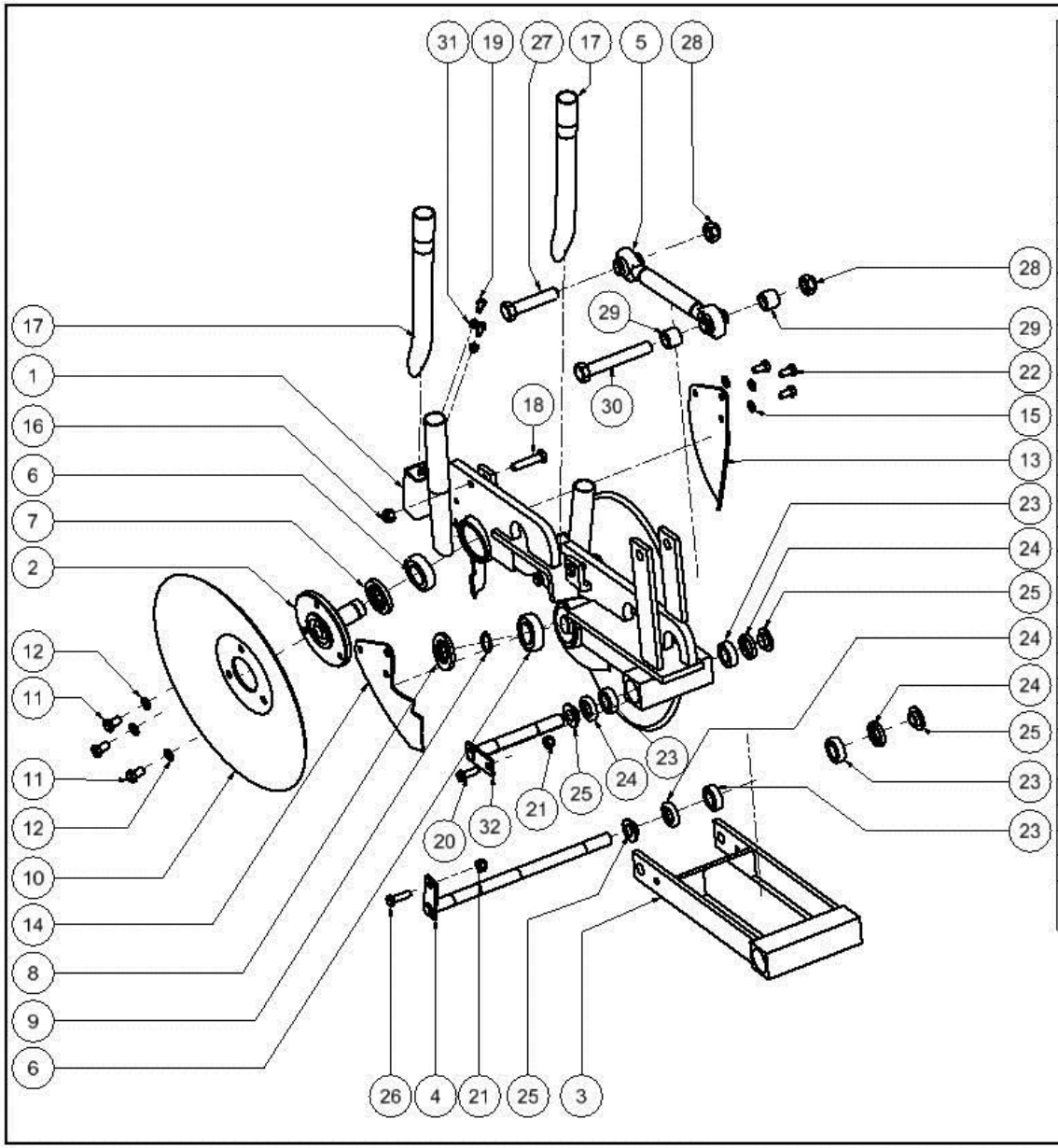

IT	Q	DESCRIPTION	PART NUMBER
1	1	Bearing Pivot Bearing Carrier Assembly Centre	A3920 ISSUE B
2	2	30mm Disc Axle Assembly	A3923
3	1	Bearing Pivot Centre Dragarm Assy	A3926 ISSUE B
4	1	Bearing Pivot Centre Front Dragarm Pin Assembly	A3933F ISSUE B
5	1	Twin Centre Disc Link Arm Assembly	A3927
6	4	6206 Bearing	92022
7	2	35 x 62 x 8 Seal	92302
8	2	30 x 62 x 7 Seal	92301
9	2	30 x 2mm External Circlip	92445
10	2	16" Concave Flat Back Disc	A2685-01
11	6	M12 x 20 Bolt	8532H
12	6	12mm Spring Washer	9052
13	1	16" RH Seed Shield	A2686RH
14	1	16" LH Seed Shield	A2686LH
15	6	10mm Spring Washer	9041
16	2	M12 Nyloc Nut	9151
17	2	Bearing Carrier Fert Tube	A3925
18	2	M12 x 55 Bolt	8512H
19	4	M8 x 20 Bolt	8311H
20	1	M10 x 30 Bolt	8415H
21	2	M10 Nyloc Nut	9142
22	6	M10 x 20 Bolt	8419H
23	4	6004 Bearing	9227
24	4	25 x 42 x 7 Seal	92303
25	4	Bearing Pivot End Boss	A3943
26	1	M10 x 35 Bolt	8402H
27	1	3/4" x 3 1/2" Bolt UNF	8620
28	2	3/4" Conelock Nut UNF	91941
29	2	Centre Dragarm Link Spacer	A2685-02
30	1	3/4 x 5" UNF Bolt ZP	8622
31	4	M8 Nut	9106
32	1	Bearing Pivot Centre Rear Dragarm Pin Assembly	A3933R ISSUE B

AITCHISON INDUSTRIES

EXPLODED VIEW DRAWING

PRODUCT: *Centre Disc Opener & Dragarm Parts*

DRAWN BY: Phil W
DATE: 20/05/2014

A2685C-ASSY

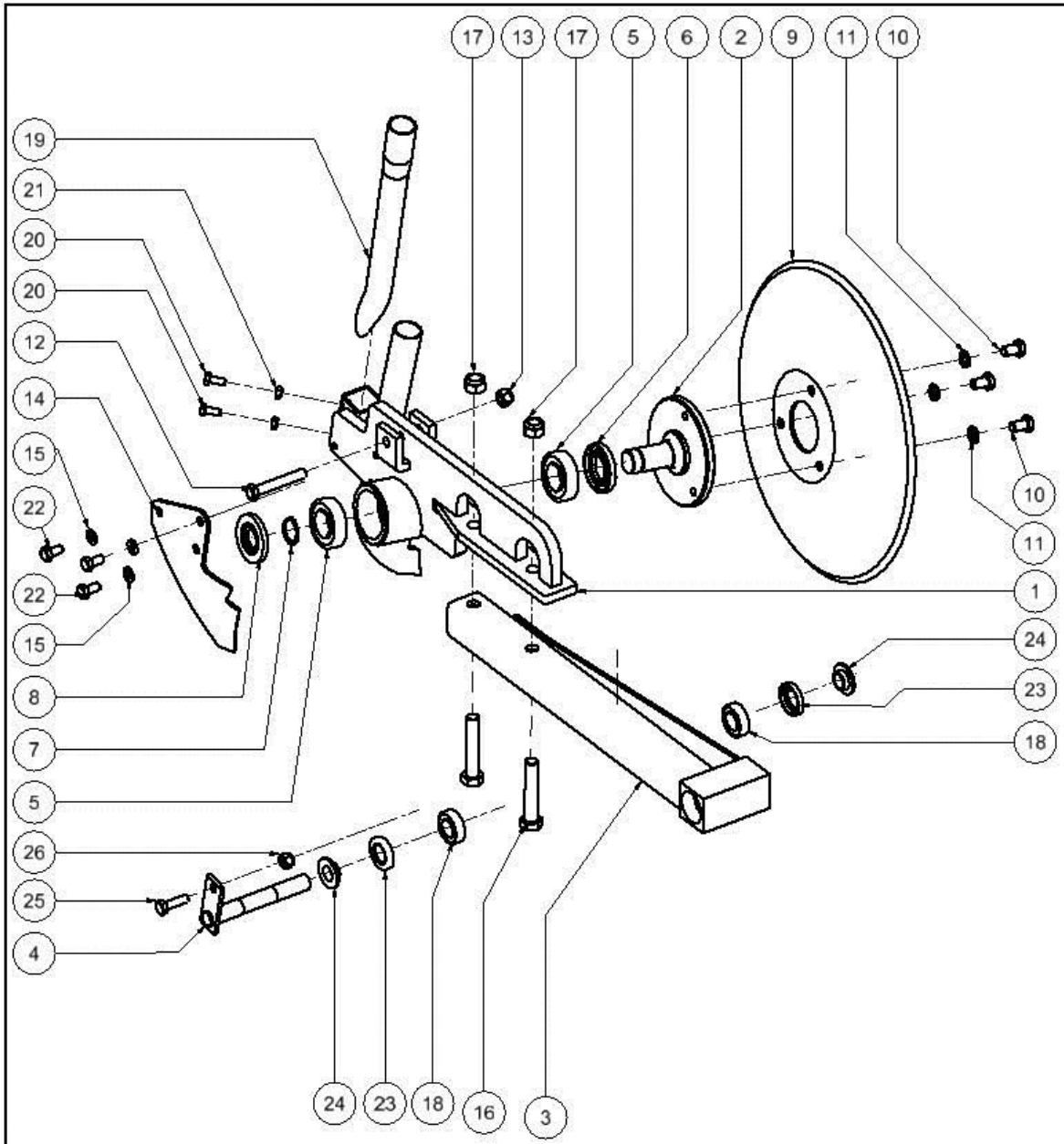

Parts List			
ITEM	QTY	DESCRIPTION	PART NUMBER
1	1	Bearing Carrier Assembly LH	A3922LH
2	1	30mm Disc Axle Assembly	A3923
3	1	Bearing Pivot Dragarm Assembly	A3942
4	1	Dragarm Bearing Pivot Pin Assembly	A3934 ISSUE B
5	2	6206 Bearing	92022
6	1	35 x 62 x 8 Seal	92302
7	1	30 x 2mm External Circlip	92445
8	1	30 x 62 x 7 Seal	92301
9	1	16" Concave Flat Back Disc	A2685-01
10	3	M12 x 20 Bolt	8532H
11	3	12mm Spring Washer	9052
12	1	M12 x 75 Bolt	8525H
13	1	M12 Nyloc Nut	9151
14	1	16" LH Seed Shield	A2686LH
15	3	10mm Spring Washer	9041
16	2	M16 x 85 Bolt	8607
17	2	M16 Nyloc Nut	16A
18	2	6004 Bearing	9227
19	1	Bearing Carrier Fert Tube	A3925
20	2	M8 x 20 Bolt	8311H
21	2	M8 Nut	9106
22	3	M10 x 20 Bolt	8419H
23	2	25 x 42 x 7 Seal	92303
24	2	Bearing Pivot End Boss	A3943
25	1	M10 x 35 Bolt	8402H
26	1	M10 Nyloc Nut	9142

AITCHISON INDUSTRIES

EXPLODED VIEW DRAWING

PRODUCT: ***LH Disc Opener & Dragarm Parts***

DRAWN BY: Phil W
DATE: 20/05/2014 A2685LH-ASSY

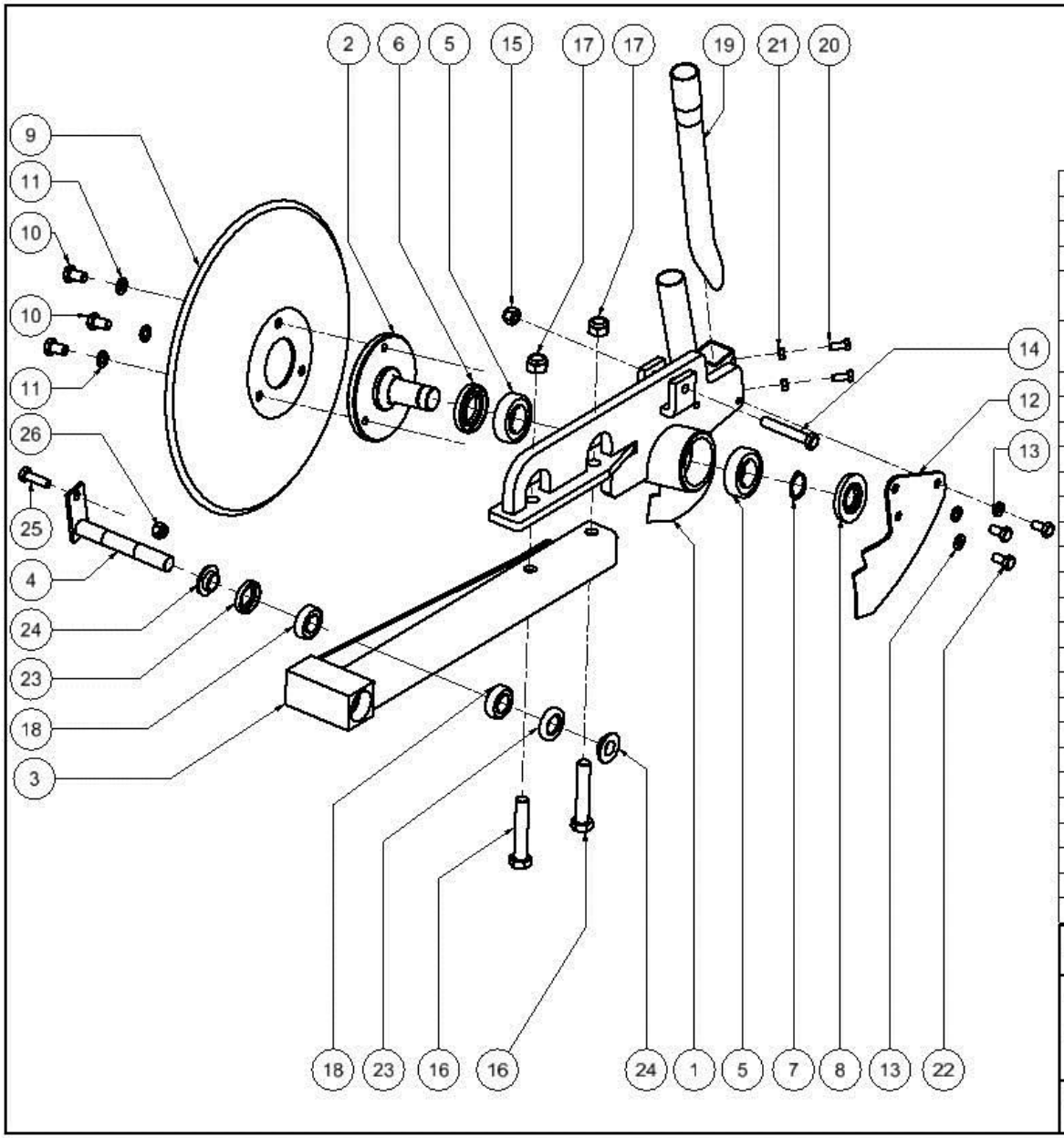

Parts List			
ITEM	QTY	DESCRIPTION	PART NUMBER
1	1	Bearing Carrier Assembly RH	A3922RH
2	1	30mm Disc Axle Assembly	A3923
3	1	Bearing Pivot Dragarm Assembly	A3942
4	1	Dragarm Bearing Pivot Pin Assembly	A3934 ISSUE B
5	2	6206 Bearing	92022
6	1	35 x 62 x 8 Seal	92302
7	1	30 x 2mm External Circlip	92445
8	1	30 x 62 x 7 Seal	92301
9	1	16" Concave Flat Back Disc	A2685-01
10	3	M12 x 20 Bolt	8532H
11	3	12mm Spring Washer	9052
12	1	16" RH Seed Shield	A2686RH
13	3	10mm Spring Washer	9041
14	1	M12 x 75 Bolt	8525H
15	1	M12 Nyloc Nut	9151
16	2	M16 x 85 Bolt	8607
17	2	M16 Nyloc Nut	16A
18	2	6004 Bearing	9227
19	1	Bearing Carrier Fert Tube	A3925
20	2	M8 x 20 Bolt	8311H
21	2	M8 Nut	9106
22	3	M10 x 20 Bolt	8419H
23	2	25 x 42 x 7 Seal	92303
24	2	Bearing Pivot End Boss	A3943
25	1	M10 x 35 Bolt	8402H
26	1	M10 Nyloc Nut	9142

AITCHISON INDUSTRIES

EXPLODED VIEW DRAWING

PRODUCT: ***RH Disc Opener & Dragarm Parts***

DRAWN BY: Phil W
DATE: 20/05/2014

A2685RH-ASSY

MONITOR INSTRUCTIONS

Hollin Applications Standard Farm Monitor

Basic Functions of:
Running Area in Acres or Hectares.
Total Area in Acres or Hectares.
Speed displayed in Kms/hour or Miles/hour
Distance Displayed in Kms.Meters

Optional Functions of:
Working Time
4 section width switch inputs for spray area
Low / High Speed Alarm

Introduction

This is a standard designed control by Hollin Applications for the general use in agriculture.

Using a small magnetic reed relay sensor mounted close to the wheel or propshaft with the magnet fixed to the rotating mechanism, the unit counts the number of turns and the rotational speed of the ground wheel.

There is a second magnetic sensor or switch input which can be used to disable the area counts at headlands etc. This can be paralleled up to a pause switch if required.

The unit stores all relevant information at switch off.

Two panel buttons allow for all adjustments of the functions on the large display.

Technical

Power supply	-	DC 10 to 30 Volts low current.
Fused	-	not applicable
Dimensions	-	6” * 4” * 21/2”
Display	-	4 character, some alphanumeric
	-	Optional backlight.
Magnetic Reed Sensor	-	M12 nylon, 40mm length, 2 mounting nuts.
	-	Protection fitted to the wheel sensor.
	-	Working distance to magnet 10 to 25mm
Circuit board	-	Standard Monitor unit – ST6265
Processor 8MHz		
	-	Memory retention of Count and options

Installation

Mount the control box within the cab so that the display can be easily seen. Position using a suitable bracket and the side mount M6 bolt fixings.

With the control switched off run the power cable to a suitable 12 volt dc power source. This must have permanent power and not be switched through the ignition or data may be lost at power off. Brown or red core for positive and blue or black for negative. The control is reverse polarity protected.

Run the wheel sensor cable, identified with the protection sleave, down through the cab to a suitable position on the axle of the wheel. Fashion a bracket to mount the wheel sensor with ½ inch hole or cable tie the sensor in a suitable position. Mount the powerful linear magnet onto the wheel hub with a suitable epoxy glue. Check that the magnet will not catch the sensor and will pass within 25mm of the sensor.

Run the machine cut off sensor cable, identified as the sensor without the protection sleeve down to a position where the machine will move at headlands. When the magnet is close to this sensor the area counters are disabled, but the speed displays are still enabled. There are many possibilities for positioning this sensor,

- Lever movements within the cab,
- Three point linkage movements at the headlands,
- Arm movements on the machine.
- Cut the sensor off and fit to spare terminals on a spray cut-off switch
- Short circuit to disable the area count.

Check again that the sensor comes within 25mm of the magnet when the unit moves.

Circumference and Width measurements.

In the start up procedure the control allows for the input of the wheel circumference and the width of the machine.

Circumference, The measurement required is actually the distance the machine moves between each pass of the sensor.
For the magnet fitted to the wheel.

1. mark the ground and the wheel.
2. drive in a straight line with a second person counting the number of wheel turns. Stop at ten turns precisely.
3. Measure the distance travelled and divide by ten.
4. Keep a record of this value for future reference.

Width is input as span of the machine, to 25.6 m maximum

Start-Up

After power on the control displays Area for 2 seconds.
During this time the control performs its own self tests.
During this period it is also possible for the user to switch
To Options mode.

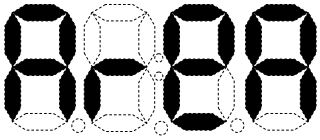

CHANGE **DISPLAY**

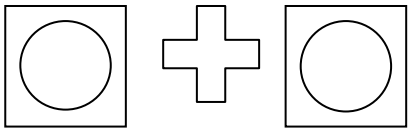

Pressing Change and Display buttons at the same time, whilst the control is in the initial test mode enters the option change mode.

Initially Circ for Circumference is displayed for 2 seconds

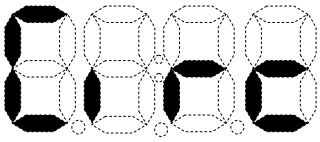

CHANGE

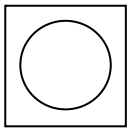

Press change to increase the circumference to the value required. Note the maximum circumference is 5.12 metes, always displayed in meters ie 5m12cm Press and hold will increment automatically.

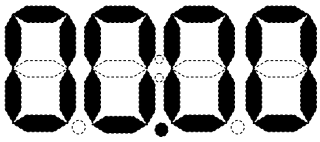

DISPLAY

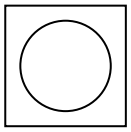

Press display once to store the new circumference and Move on to input the span of the machine.

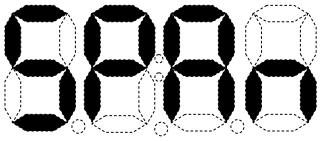

CHANGE

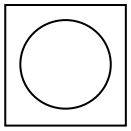

Press change to increase the machine span to the value required. Note the maximum machine width is 25.6 meters, always displayed in meters ie 25m60cm, Press and hold will increment automatically.

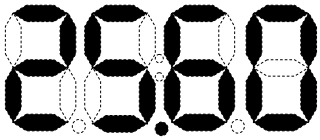

DISPLAY

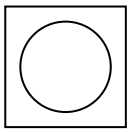

Press display once to store the new span value and Move on to the operational mode.

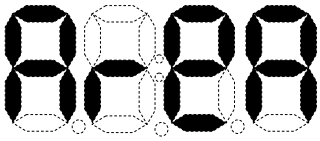

Operational Mode

After the initial 2 second display of area the control will always switch to display the identifier for the last Mode i.e. if switched off in distance then on in distance.

There are seven displayed modes of operation. These are swapped sequentially with each press of the display button. Holding the button displays a character sequence as an identifier. Press and hold the change button to reset the area and distance counts.

Running Hectare and Acre Display

Displays an accurate running Hectare Area covered.
The smallest denomination displayed is
0.001 Hectares ie 10 m2.

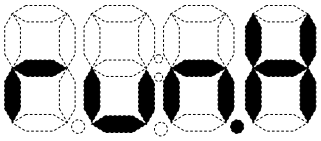

CHANGE

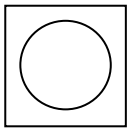

Press and hold change to clear the running Area store. Note this also clears the running Acre display

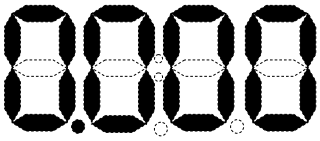

DISPLAY

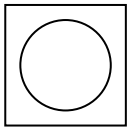

Press display once to convert to show in Acres.

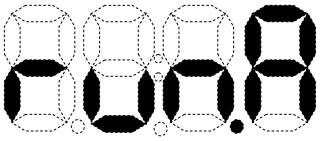

Total Hectare and Acre Display

Press Display again to change to the total or machine area displays
This displays an accurate running Hectare Area covered.
The smallest denomination displayed is
0.001 Hectares ie 10 m2.

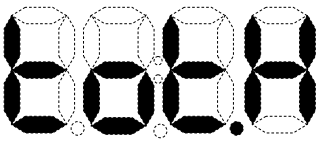

CHANGE

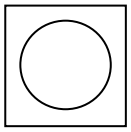

Press and hold change to clear the running Area store.
Note this also clears the running Acre display

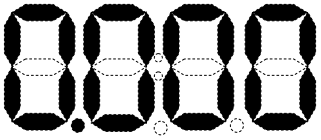

DISPLAY

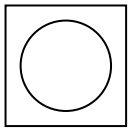

Press display once to convert to show in Acres.

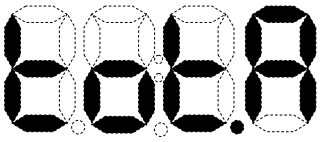

Two Speed Displays

Press Display again to change to the speed display.
This displays an accurate running ground speed.

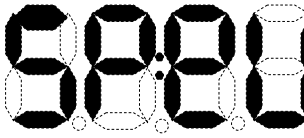

Initially displays SP:EU for european measurements and displays Ground speed in Km's per hour

DISPLAY

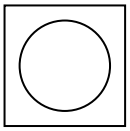

Press display once to convert to show in Miles/hour.
Initial shown by SP:GB

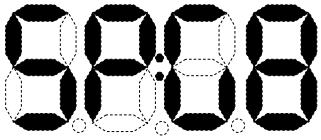

Speed Display is updated every 2 seconds.
If there are no pulses for 10 seconds then the display will clear.

Display Distance in Kilometers and Meters.

Press Display again to change to show Distance
This displays an accurate running Distance covered.
The smallest denomination displayed is 0.001 Kms or 1 m.

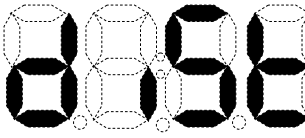

DISPLAY

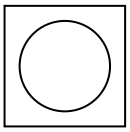

Press and hold change to clear the Distance store.

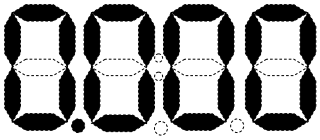

Press display again to revert to running area.